THERMOSTATIC COMBINATION VALVE (5 OR 6 WAY)

Espar Products, Inc.
(800) 387-4800
(905) 670-0960
www.espar.com

INTRODUCTION

Thermostatically controlled Combination Valve (5 or 6-way option) with its state of the art yet simple design brings additional customer comfort and safety while functioning in conjunction with ESPAR pre heating units. This valve enables the heat energy from the heater to be routed in a balanced manner, primarily to the passenger compartment, while also heating the engine. It efficiently regulates and manages the flow of the coolant inside the heating circuit depending on temperature and pressure of the coolant. With the use of valve, fast and effective cab heating during cold weather can be achieved while block heating is controlled thermostatically during the initial stages of the heater.

TECHNICAL DESCRIPTION		
Valve Name	Thermostatic Combination Valve	
Part number:	25 2014 80 72 00	25 2014 80 62 00
Compatibility:	Hydronic II/D5S/D5SC,M/10,MII	Hydronic II/D5S/SC,M/10, MII
Weight:	100 grams	117 grams
Material:	Thermoplastic	
Control element:	Cylindrical Spring (NiTi – Shape Memory Alloy)	
Reset element:	Conical Spring (Stainless Steel Alloy)	
Control Duration:	2 sec for open, 15 sec for shut off (@67°C +/- 2°C)	

PRODUCT DIMENSIONS

		Hydronic 4 / 5 KW	Hydronic M / MII	Order no.
Combination valve with 5 connections	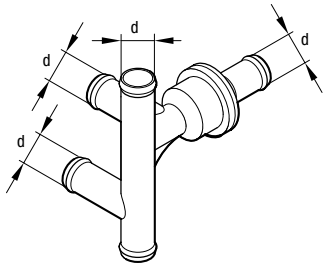			
* with thermostat function				
Also required: Pipe T-piece (20x20x20 mm : 20 1673 80 11 00)	* d = 20 mm	~	■	25 2014 80 72 00
Combination valve with 6 connections	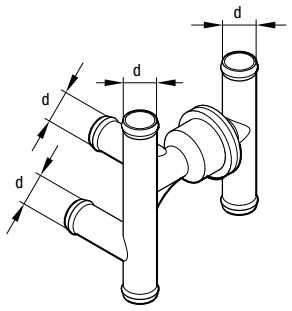			
* with thermostat function	* d = 20 mm	~	■	25 2014 80 62 00

■ Suitable for unlimited use

~ For limited use. The operation of Hydronic D5WS/SC heater with Combination Valve is equivalent to the operation of the latest Hydronic II Comfort heater with inbuilt thermostatic valve and a separate non return valve.

CONSTRUCTION

Combination valve has simple, lightweight and durable components that are mostly made of corrosion and temperature resistant type thermoplastic material. Depending on the shape of housing, there are two types of valve option available: 5-way and 6-way. The 5-way valve can work in conjunction with a T-joint, and it can be installed even in crimped space while 6-ways valve with an inbuilt T-joint is for easier installation though, it requires a bit larger space for installation than 5-way valve.

THERMOCOMBINATION VALVE

Internally, combination valve has two main components:
Check valve and Switching actuator assembly.

Check Valve: It maintains unidirectional flow in the valve without allowing coolant to flow in the opposite or undesired direction. It has smooth and non-porous inner surface as well as a lightweight ball, which ensures high flow with low-pressure drop across the valve when fully open.

Switching actuator assembly: It is the most important component of combination valve, which mainly acts as a thermostat of the valve. The actuator operates switching action based on the temperature of the coolant and pressure differential at it. The actuator assembly includes a plastic piston, which is placed in the normally closed position by a reset force from stainless steel type conical compression spring at the one end while a cylindrical spring “working element” made of (NiTi) nickel-titanium based “shape memory alloy” at the other end. Generally, Shape memory alloy (SMA) has a tendency to remember and return to their original state following exposure to hot temperature of particular value. Therefore, using such special characteristics of SMA into the application, the SMA based working element “cylindrical spring” is designed to open and close the valve at pre-set temperature (67 +/-2 °C) by moving the piston against stainless steel conical spring as shown in the figure below.

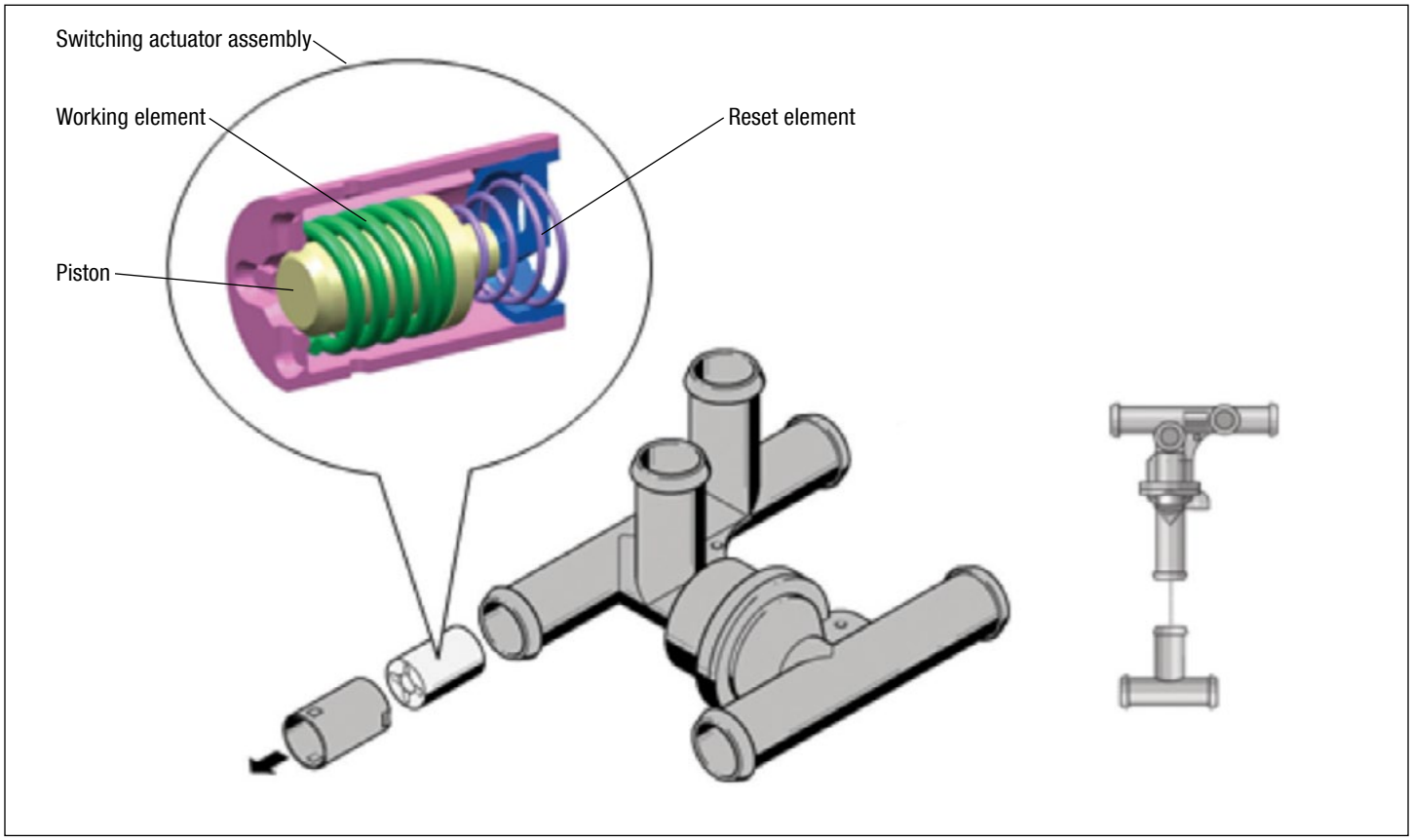

Thermostatic Valve closed T@ < 67 °C

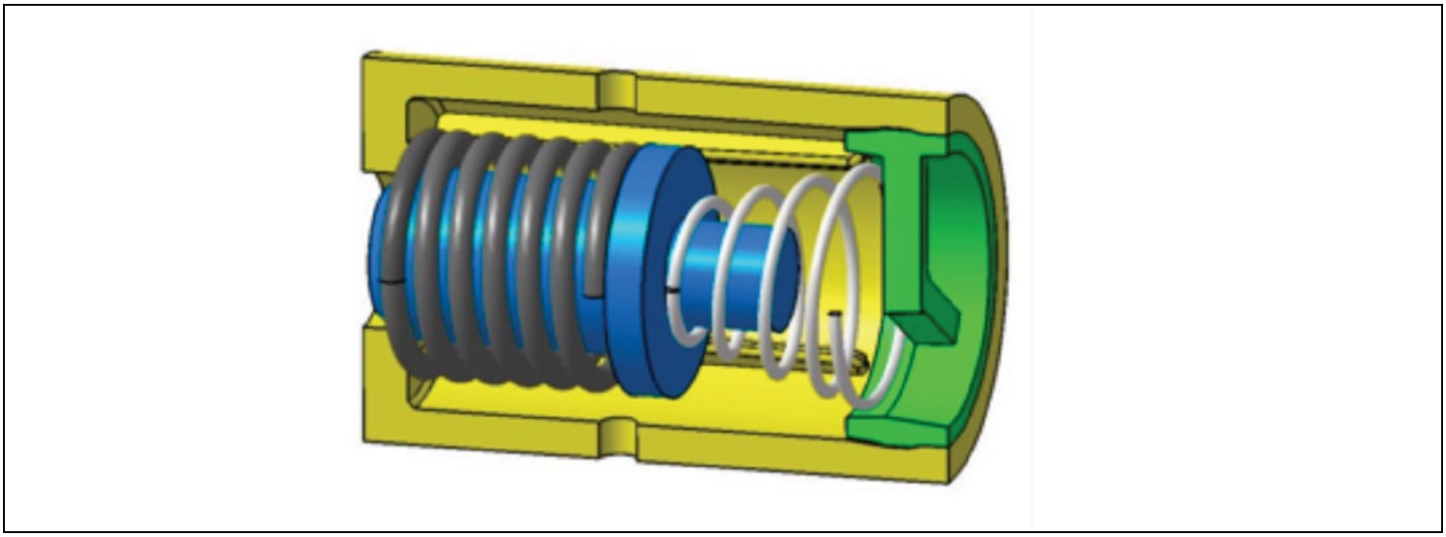

Thermostatic Valve opened T@ > 67 °C

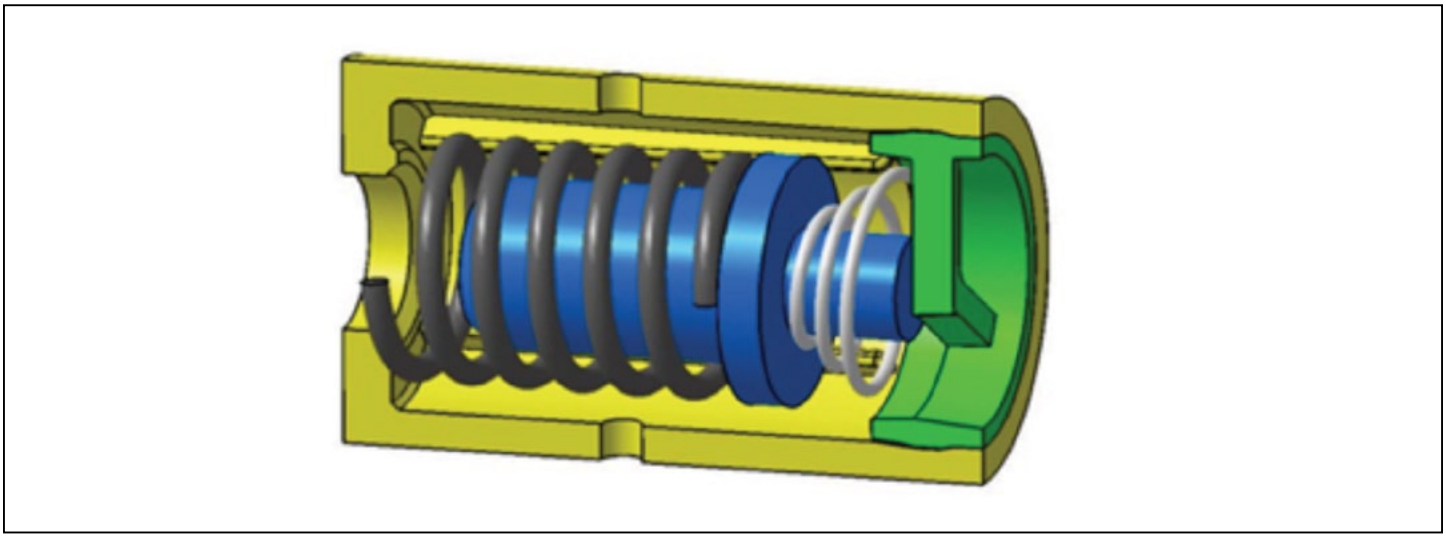

The Switching actuator assembly can also be affected by pressure differential generated at its ends due to supply pressure from coolant/water pump from either heater or engine itself. If whichever ends of the piston exert relatively higher pressure than the other side, the final resultant force due to pressure difference would move the whole actuator assembly, which consequently changes the coolant flow direction in the circuit.

INSTALLATION

Combination valve can be installed in a coolant circuit depending on the priority of instant cab/comfort heat or engine heat.

1) Installation of Combination valve for Comfort/cab-heat (priority) *:
   Please see the following installation procedures:

   Install combination valve with 5 way connection:

   Cut the water flow hose from the vehicle engine to the vehicle's heat exchanger and insert the combination valve. Cut the water return hose from the vehicle's heat exchanger to the vehicle engine and insert the T-piece. Use water hoses to connect the heater and water pump to the combination valve and T-piece – as shown in the sketch below.

   Install combination valve with 6 way connection:

   Cut the water flow hose and the water return hose from the vehicle engine to the vehicle's heat exchanger and insert the combination valve. Use water hoses to connect the heater and water pump to the combination valve – as shown in the sketch below.
   (**Preffered Installation*)

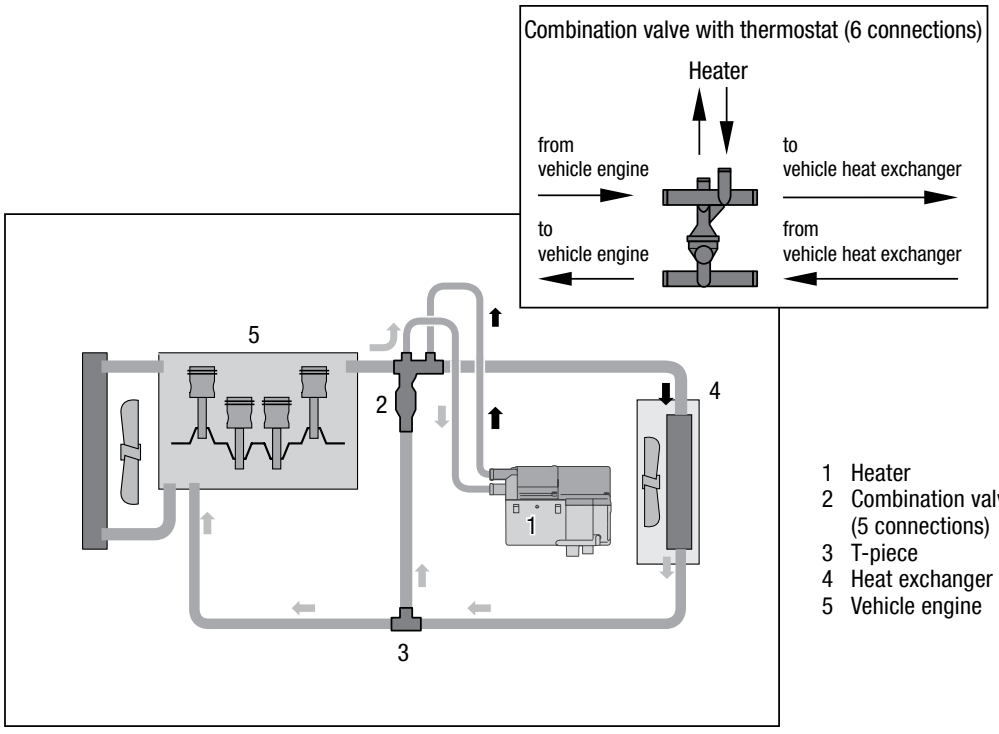

1 Heater
2 Combination valve (5 connections)
3 T-piece
4 Heat exchanger
5 Vehicle engine

2) Installation of Combination valve for engine heat (priority):
Please see below installation procedures.

Install combination valve with 5 connections:
Cut the water flow hose the vehicle's heat exchanger to the vehicle engine and insert the combination valve. Cut the water hose from the vehicle engine to the vehicle's heat exchanger and insert the T-piece.
Use water hoses to connect the heater and water pump to the combination valve and T-piece – as shown in the sketch below.

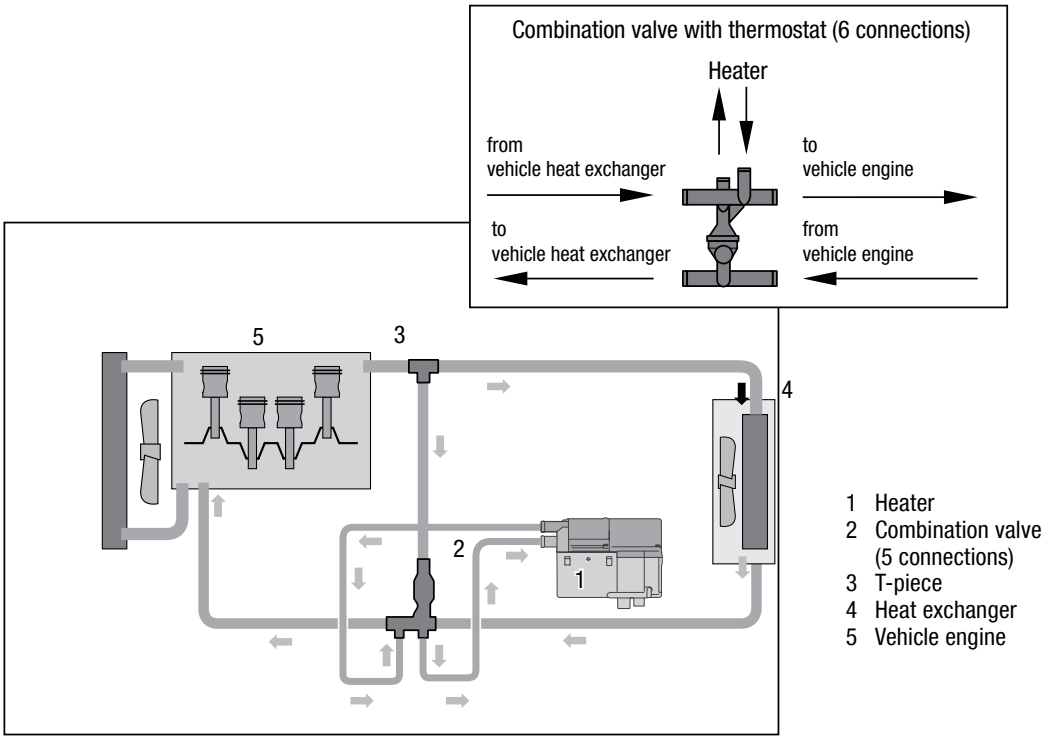

1 Heater
2 Combination valve (5 connections)
3 T-piece
4 Heat exchanger
5 Vehicle engine

Install combination valve with 6 connections:

Cut the water flow hose and the water return hose from the vehicle's heat exchanger to the vehicle's engine and insert the combination valve. Use water hoses to connect the heater and water pump to the combination valve – as shown in the sketch above.

OPERATION

In comfort/cab-heat installation using 5 ways Combination valve:

1) The heater is in operation when the engine is OFF and coolant temperature is less than 67°C (small water circuit)

   Water Circuit: Comfort / Cab heat.

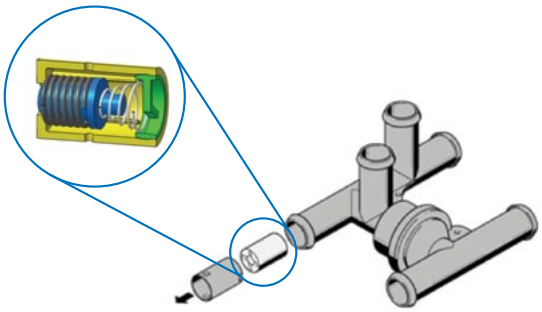

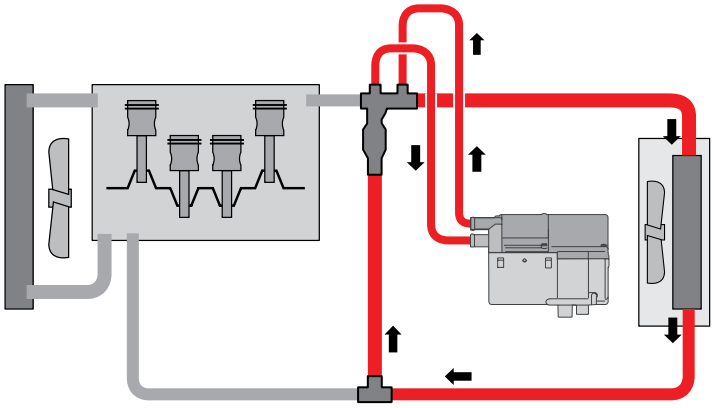

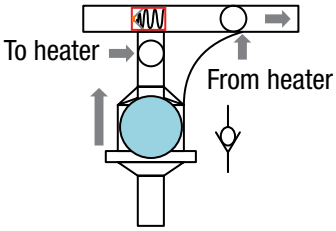

2) The heater is in operation when the engine is OFF and coolant temperature is almost equal or more than 67°C (partial engine heat).
   (And, If the engine is ON then it should be at low idle speeds)

   Water Circuit: Comfort / Cab heat.

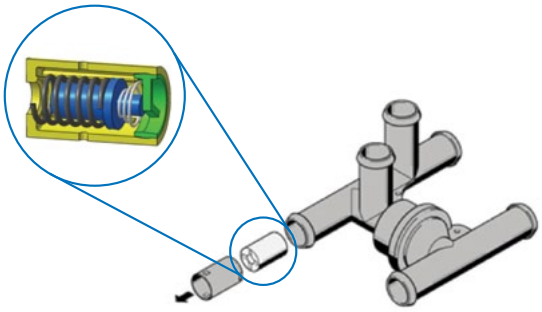

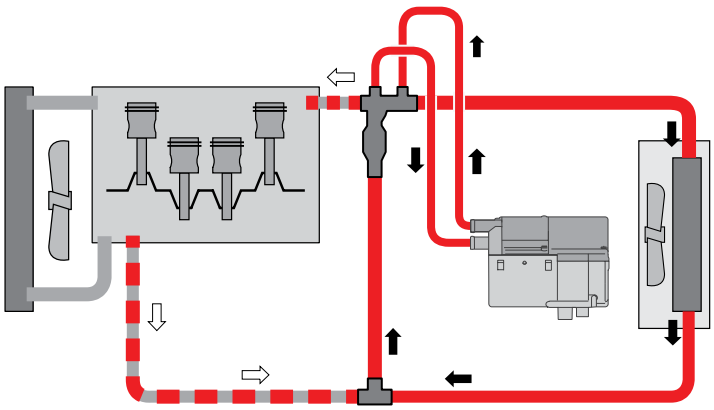

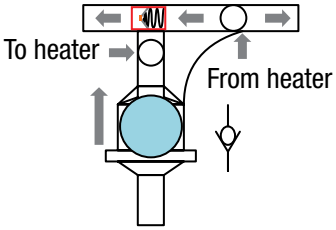

3) The heater is in operation while the engine is ON and coolant temperature at any value. (Large water circuit)

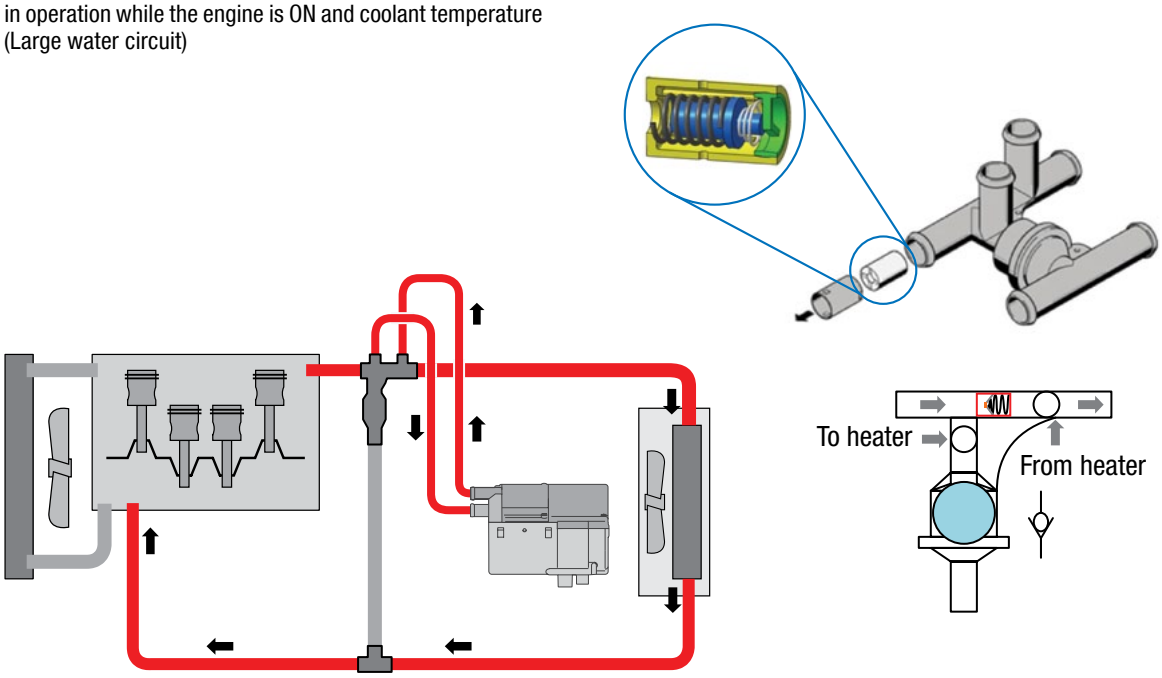

CAUTION:

- Please make sure the direction of the coolant flow from Heater's water pump is in the same direction as Vehicle's water pump.
- Wrong installation of the Valve may block or restrict the coolant flow, which could overheat the heater; or increase the coolant pressure and temperature leading to heavy load on water pump, coolant leakage, or even component failure including valve itself.
- Avoid using coolant with high amount of contamination, i.e. sand blast particles, engine block fine chips or other foreign elements, which could cause serious accumulation at valve thereby causing high resistance to flow. (In such condition, flush out contaminated coolant and clean the circuit, then refill the coolant and run the vehicle's water pump for 15 mins with radiator or expansion tank's cap partially open to remove any entrapped air pockets in the system.)
- Always keep the minimum amount of coolant in the system and avoid maximizing the pressure beyond a certain level as stated in Technical Document of the heater.