

TECHNICAL DOCUMENTATION

# TECHNICAL DESCRIPTION
# HYDRONIC L3

**The technical description and installation instructions are valid for the following engine-independent water heaters:**

| Water heaters | Order No. | Order No. Compact version |
|---|---|---|
| Hydronic L3-16, 24 V | 25.3042.02.0000 | |
| Hydronic L3-24, 24 V | 25.3043.02.0000 | 25.3043.05.0000 |
| Hydronic L3-30, 24 V | 25.3040.02.0000 | 25.3040.05.0000 |
| Hydronic L3-30, 24 V HVO | 25.3116.02.0000 | |
| Hydronic L3-35, 24 V | 25.3041.02.0000 | 25.3041.05.0000 |
| Hydronic L3-35, 24 V HVO | 25.3117.02.0000 | |

## SEGMENT OVERVIEW


CONSTRUC-
TION


AGRICULTURE/
FORESTRY


RV


UTILITY/
CARGO


CAR/LCV


AMBULANCE


PUBLIC
SAFETY


NAVY


PERSONNEL
TRANSPORT


TRUCK/HCV


RAILWAY


MILITARY

# 1 INTRODUCTION


1.1 Concept of this manual 5
1.2 Reference documents 5
1.3 Special text structure, presentation and pictograms 5
1.3.1 Lists 5
1.3.2 Cross references 5
1.4 Pictograms 5
1.5 Intended use 6
1.5.1 Range of application of the heater 6
1.5.2 Intended use of the heater (via the vehicle's own heat exchanger) 6
1.6 Non-intended use 6
1.7 Disclaimer 6
1.8 Target groups of this document 6
1.8.1 Instruction obligation of the target groups 7
1.9 Statutory regulations 7
1.9.1 ECE approval 7
1.9.2 Use in railway vehicles 8
1.10 Hazard information and safety instructions for installation 8
1.11 Hazard information and safety instructions for operation 9
1.12 Accident prevention 9


# 2 PRODUCT INFORMATION


2.1 Scope of supply 10
2.2 Scope of supply – heater, installation kit and additional parts 11
2.3 Technical data 14
2.3.1 Hydronic L3 14
2.3.2 Water pumps 15
2.4 Main dimensions heater 18
2.5 Main dimensions heater compact version 18
2.6 Main dimensions water pump 19
2.6.1 Flowtronic 5000 19
2.6.2 Flowtronic 5000 S 20
2.6.3 Flowtronic 6000 SC 21


# 3 INSTALLATION


3.1 Mounting the heater 22
3.3 Hole pattern heater 22
3.4 Installation location 23
3.5 Installing the heater in a box 24
3.6 Installing the water pump 24
3.7 Nameplate 24
3.8 Exhaust system 25
3.8.1 Installing the exhaust system 25
3.9.1 Example for the combustion air system 27
3.10 Installing the combustion air duct with hose connection 27
3.11 Connection to the coolant liquid circuit 28
3.11.1 Bleeding the water circuit on the heater 28
3.11.2 Installation example for a water circuit 29
3.12 Fuel supply 29
3.13 Fuel quality 30
3.13.1 Operation with diesel fuel 30
3.13.2 Operation with HVO 30
3.14 Heating oil operation with additional tank 30
3.15 Operation with biodiesel (FAME) 30
3.16 Connection of the intake and return line to the heater 30

## 4 OPERATION AND FUNCTION

4.1 Structure of the heater 31
4.2 Operating instructions 31
4.3 Operating modes 32
4.3.1 Heating 32
4.3.2 Parking ventilation 32
4.3.3 Water pump control (external) 32
4.4 Initial commissioning of the heater 32
4.5 Important instructions for operation 32
4.5.1 Safety checks before starting up the heater 32
4.5.2 Before switching on 32
4.5.3 Heating at high altitudes 32
4.6 Functional description 32
4.6.1 Burner start 32
4.7 Control and safety devices 33
4.8 Emergency stop – EMERGENCY OFF 34

## 5 ELECTRICS

5.1 Heater wiring 34
5.2 Parts list for circuit diagram, heater and cable harness 35
5.3 Heater circuit diagrams 36
5.3.1 Heater 36
5.3.2 Cable harness 37
5.4 Circuit diagrams for control units 38
5.4.1 EasyStart Timer with connection via S+ 38
5.4.2 EasyStart Timer with connection via LIN 39
5.4.3 EasyStart Remote+ with connection via S+ 40
5.4.4 EasyStart Remote+ with connection via LIN 41
5.4.5 EasyStart Remote with connection via S+ 42
5.4.6 EasyStart Remote with connection via LIN 43
5.4.7 EasyStart Web with connection via S+ 44
5.4.8 EasyStart Web with connection via CAN 45
5.4.9 EasyStart Pro with connection via CAN 46

## 6 TROUBLESHOOTING / MAINTENANCE / SERVICE

6.1 If any faults occur, check the following points 47
6.2 Troubleshooting 47
6.3 Maintenance instructions 47
6.4 Initial startup 47
6.5 Changing components 47
6.6 Service 47

## 7 ENVIRONMENT

7.1 Certification 47
7.2 Disposal 48
7.3 EU Declaration of Conformity 48
7.4 UKCA Declaration of Conformity 48

## 8 MAINTENANCE SCHEDULE 49

# 1 Introduction

## 1.1 Concept of this manual

This manual aims to support the service company installing the heater and to provide the user with all important information about the heater.

**NOTE**

- The documentation is intended for the installation of the heaters listed on the title page and is valid to the exclusion of any liability claims. The installation work may only be carried out by appropriately trained personnel of an Eberspächer service partner.
- Depending on the version or revision status of the heater, differences may occur compared to this documentation. Please check this before carrying out the installation and take into account possible differences.

The manual is divided into 8 chapters so that information can be found quickly.

**1 Introduction**
This section contains important introductory information about installing the heater and about the structure of the manual.

**2 Product Information**
Here you will find information about the scope of supply, the technical data and the dimensions of the battery.

**3 Installation**
Important information and notes concerning the installation of the heater.

**4 Operation and Function**
Information on operation and function of the heater.

**5 Electronics**
Here you will find information about the electronics and circuit diagrams of the heater as well as the circuit diagrams of the control elements.

**6 Fault / Maintenance / Service**
Information on possible faults, maintenance and technical support.

**7 Environment**
Here you will find information about certification and disposal of the heater, together with the EU Declaration of Conformity.

**8 Maintenance Schedule and Measurement Log**
Here you will find the maintenance schedule and the measurement log for heaters installed in railway vehicles.

## 1.2 Reference documents

**Spare parts list**
Contains the information necessary for ordering spare parts.

**Repair instructions**
Contain the necessary information for troubleshooting and for repair of the heater.

**Installation recommendation**
Describes vehicle-specific installation situations.

**Installation Manual Plus**
Supplementary information on heaters and control units.

## 1.3 Special text structure, presentation and pictograms

In this instruction, different facts are highlighted by special notations and pictograms. Refer to the following examples for their meanings and appropriate action.

### 1.3.1 Lists

- This dot (•) indicates a list or action step, introduced by a heading.

### 1.3.2 Cross references

Underlined blue text denotes a cross-reference, which can be clicked in the PDF document. The part of the document named in the text is then displayed.

## 1.4 Pictograms

**REGULATION!**
This information indicates a statutory regulation. Any violation of these regulations results in expiry of the type-approval for the heater and exclusion of any guarantee and liability claims against Eberspächer Climate Control Systems International GmbH.

**DANGER!**
"Danger" indicates a situation that can directly result in death or serious injuries if not avoided.
→ This arrow indicates the appropriate measures to avert the imminent danger.

**WARNING!**
"Warning" indicates a situation that can potentially result in death or serious injuries if not avoided.
→ This arrow indicates the appropriate measures to avert the potential danger.

**CAUTION!**
"Caution" indicates a situation that can potentially result in minor or slight injuries or damage to the device.
→ This arrow indicates the appropriate measures to avert the

potential danger.

**NOTE**
This note contains recommendations for use and useful tips for the operation, installation and repair of the product.

## 1.5 Intended use

### 1.5.1 Range of application of the heater

The engine-independent water heater is designed for installation in the following vehicles, taking into account its heating capacity:

- All types of motor vehicles, especially buses and coaches
- Construction machinery
- Agricultural machinery
- Boats, ships and yachts
- Railway vehicles

**NOTE**
- The heater cannot be installed in vehicles used for the transport of dangerous goods according to ADR.
- The heater is primarily intended for installation in buses and is designed for their specific requirements. It should be noted that installation in vehicle interiors used by people (more than 8 passenger seats) is not permitted. For exceptions see Page 7: Statutory regulations, arrangement of the heater.

### 1.5.2 Intended use of the heater (via the vehicle's own heat exchanger)

- Pre-heating, de-misting windows
- Heating and warming the following:
  - Driver and working cabs
  - Freight compartments
  - Ship cabins
  - Passenger and crew compartments
  - Vehicle engines and power units

**WARNING!**

**SAFETY INSTRUCTIONS FOR THE RANGE OF APPLICATION AND THE INTENDED USE!**
The heater must only be used and operated for the range of application stated by the manufacturer and in compliance with the operation instructions included with every heater.

## 1.6 Non-intended use

On account of its functional purpose, the heater is not approved for the following applications:

- Long-term continuous operation, e.g. for preheating and heating:
  - Residential rooms
  - Garages
  - Workplaces, weekend houses, hunting huts, etc.
  - Houseboats, etc.

**WARNING!**

**RISK OF UNDERCOOLING!**
- The heater does not replace a temperature-monitored and controlled heating system, which ensures that a constant temperature is maintained and thus ensures survival in adverse weather conditions. It is not suitable for the continuous heating of vehicle interiors at low outdoor temperatures.
- Use, operation and deployment of the product outside the intended use stated by the manufacturer can cause considerable injuries to people and/or damage to machinery and property.

→ Only use the project for the stipulated purpose and in the approved area of use.

## 1.7 Disclaimer

The manufacturer is not liable for damage caused by improper use or incorrect operation. Failure to comply with the safety instructions makes the guarantee null and void and this leads to the exclusion of any liability of Eberspächer Climate Control Systems International GmbH.

## 1.8 Target groups of this document

This document is aimed at the following target groups:

**Service company**
The "service company" target group includes all service companies trained by Eberspächer that purchase heaters and air-conditioners and their control units, accessories and spare parts from Eberspächer or the aftermarket, and install, repair or service these on behalf of an end user.

**Installation company**
The "installation company" target group includes all companies trained by Eberspächer that purchase heaters and air-conditioners and their control units, accessories and spare parts from Eberspächer and install, repair or service these on behalf of another company (usually the automotive / body manufacturer).

**End user**
The "end user" target group includes all natural persons who operate a heater or air conditioner with the help of a control unit, regardless of whether they act as a consumer or as part of their job.

### 1.8.1 Instruction obligation of the target groups

Each named target group must fully comply with its instructional obligation. The instruction obligation refers to the forwarding of technical documents.

Technical documents are all documents published by Eberspächer for the installation, operation, use, maintenance or repair of heaters and air conditioners and their control units, accessories and spare parts.

**NOTE**

- If not explicitly defined in the following, the technical documents can be passed on printed out as hard copies, on a data carrier or by internet download.
- Current technical documents can be downloaded from the Eberspächer website.

**Responsibility of the installation company**

The installation company must pass on the following technical documents to the company that employs them, and it in turn is obliged to pass on the documents to the end user:

- Technical description
- Operating instructions

**Responsibility of the service company**

The service company must pass on the following technical documents to the end user, even if they employ a subcontractor:

- Technical description
- Operating instructions

**NOTE**

The named target groups must ensure that the operating instructions produced by the manufacturer for the product are made available to the end user in printed form and in their own national language. If necessary this can be a short form of the detailed operating instructions, which are additionally enclosed with the product on a data carrier or are available to download from the internet.

## 1.9 Statutory regulations

### 1.9.1 ECE approval

The German Federal Motor Transport Authority has issued an approval for a component according to ECE-R122 and ECE-R10 for the heater for installation in motor vehicles, with the following official type-approval markings noted on the heater's nameplate.

| Heater type | ECE type approval mark |
|---|---|
| Hydronic L3 | E1 122 R – 000629<br>10 R – 069516 |

**REGULATION!**

**EXCERPT FROM ECE REGULATION NO. 122 OF THE EUROPEAN PARLIAMENT AND TEH COUNCIL**

**General regulations**

- Display of the state of operation

A clearly visible operating display in the user's field of vision must indicate when the heater is switched on and off.

**Regulations concerning installation in the vehicle**

**Scope of Application**

- Subject to differing stipulations in the following section, combustion heaters must be installed according to the regulations 5.3 of ECE-R122.
- It is assumed that Class 0 vehicles with liquid fuel heaters conform to the regulations 5.3 of ECE-R122.

**Positioning of the heater**

- Parts of the structure and other components near the heater must be protected from excessive heat exposure and possible fuel or oil contamination.
- The combustion heater shall not constitute a risk of fire, even in the case of overheating. This requirement is considered to be met if proper clearance to all parts and suitable ventilation are provided during installation, and fire resistant materials or heat shields are used.
- The heater must not be installed in the passenger compartment of class $M_2$ and $M_3$ vehicles. However, a heater in a hermetically sealed enclosure which also complies with the aforementioned conditions may be used.
- The nameplate, or a duplicate, must be positioned so that it can be easily read when the heater is installed in the vehicle.
- In placing the heater, all reasonable precautions must be taken to minimize the risk of injury to persons or damage to property carried.

**Fuel supply**

- The fuel filler neck must not be located within the passenger compartment and must be sealed with a properly closing cover to prevent any fuel leaks.
- In heaters for liquid fuel where the heater fuel supply is separate from the vehicle fuel supply, the type of fuel and filler neck must be clearly marked.
- A warning sign is to be attached to the filler neck informing that the heater must be switched off before refuelling.

**Exhaust system**

The exhaust outlet must be arranged so as to prevent any penetration of exhaust fumes into the vehicle interior through the ventilation system, warm air intakes or open windows.

**Combustion air intake**

- The air for the heater's combustion chamber may not be drawn in from the vehicle's passenger compartment.
- The air intake must be arranged or protected in such a way that it cannot be blocked by other objects.

**Automatic control of the heating system**

If the engine fails, the heating system must be switched off automatically and the fuel supply stopped within 5 seconds. If a manual setup is already activated, the heating system may remain in operation.

**NOTE**

- The heater is not approved for installation in the driver's cab or passenger compartment of Class $M_1$ (vehicles for passenger transport / cars) and N vehicles (vehicles for the transport of goods).
- Compliance with the statutory regulations, the additional regulations and the safety instructions is prerequisite for guarantee and liability claims.
  Failure to comply with the statutory regulations and safety instructions and incorrect repairs, even if original spare parts are used, make the guarantee null and void and exclude any liability whatsoever of Eberspächer Climate Control Systems International GmbH.
- Subsequent installation of this heater must comply with these installation instructions.
- The statutory regulations are binding and must also be observed in countries which do not have any special regulations.
- When installing the heater in vehicles not subject to the German Road Traffic Licensing Regulations (StVZO), for example ships, the respective specially valid regulations and installation instructions must be observed.
- When installing the heater in special vehicles, the regulations applicable to such vehicles must be observed.
- Further installation requirements are printed in the relevant sections of these installation instructions.

### 1.9.2 Use in railway vehicles

For the Hydronic L3 heaters' installation in rail vehicles TÜV Rail has issued an inspection report with the following inspection number:

| Heater type | TÜV Rail Inspection Report |
|---|---|
| Hydronic L3 | EE 103635T<br>Safety requirements for railway vehicles according to DIN EN 50155, section 11.2 and 11.4. |

## 1.10 Hazard information and safety instructions for installation

**DANGER!**

**RISK OF INJURY, FIRE AND POISONING!**

- Disconnect the vehicle battery before starting any kind of work.
- Before working on the heater, switch the heater off and let all hot parts cool down.
- The heater may not be operated in enclosed spaces, e.g. in the garage or in a multi-storey car park.

**CAUTION!**

**SAFETY INSTRUCTIONS FOR INSTALLATION!**

- Mark the year of initial commissioning on the nameplate.
- Have the heater installed only by a service partner authorised by the manufacturer according to the instructions in this manual, possibly according to special installation recommendations; the same applies to any repairs to be carried out in the case of repairs or guarantee claims.
- The following measures are not allowed:
  - Changes to heating-relevant components.
  - Use of third party parts not approved by the manufacturer.
  - Deviations from the statutory, safety and / or functionally relevant requirements stated in this document regarding installation and/or operation. This applies in particular to the electrical wiring, fuel supply, combustion air system and exhaust system.
- Transport and/or storage of the heater by hanging it from the integrated cable harness is not permitted.
- Only use original accessories and original spare parts for installation and repairs.
- When performing electric welding work on the vehicle, disconnect the positive terminal cable from the battery and connect it to ground to protect the control unit.
- Replace defective fuses only with fuses with the specified fuse rating.

**NOTE**

- All deviations from the safety requirements for installation are to be agreed with the manufacturer in writing before they are implemented.
- After installation, affix the "Switch off heater before refueling!" information sticker in the area of the tank filler neck.

## 1.11 Hazard information and safety instructions for operation

**NOTE**

The notes in this chapter also apply in part to chapter 1.10. They should therefore also be taken into consideration for the installation.

**DANGER!**

**RISK OF INJURY, FIRE AND POISONING!**

- Do not start up the heater in enclosed spaces, e.g. garage or multi-storey car park.
- When storing or parking a vehicle with a built-in heater in closed or poorly ventilated rooms, the heater must be disconnected from the power or fuel supply, for example:
  - by actuating the battery cut-off switch
  - by pulling the electric fuse of the heater
  - by disconnecting the heater from the battery
  - by closing a fuel shutoff valve
- It is not permitted to operate the heater near flammable materials (e.g. dry grass, leaves, paper, etc.) in the area of the exhaust system or where ignitable fumes and dust can form, e.g.:
  - Fuel depot
  - Coal depot
  - Wood depot
  - Grain storage and similar places.

**CAUTION!**

**SAFETY INSTRUCTIONS FOR OPERATION!**

- The heat exchanger of water heaters, which is a thermally highly stressed component, should be replaced 10 years after the heater was first put into operation. In addition, enter the installation date on the "original spare part" plate enclosed with the heat exchanger. Then affix the plate next to the nameplate on the heater.
- Only use the control units approved by the manufacturer to operate the heater. Use of other control units can cause malfunctions.
- Repairs by unauthorised third parties and / or not using original spare parts are dangerous and therefore not allowed. They result in the nullification of the type approval of the heater and thus, in the case of motor vehicles, possibly in the nullification of the vehicle's operating permit.
- Switch off the heater before refuelling.
- If the heater is installed in a safety housing or similar, the heater's installation box must not be used as storage space and must be kept clear. In particular, do not store or transport fuel canisters, oil cans, spray cans, gas cartridges and other hazardous substances, fire extinguishers, cleaning rags, items of clothing, paper etc. on or next to the heater.
- Replace defective fuses only with fuses with the specified fuse rating.
- If fuel escapes from the heater's fuel system (leak), arrange for immediate repair of the damage by an Eberspächer service partner.
- When topping up the coolant, only use the coolant permitted by the vehicle manufacturer, see the vehicle operating manual. Any blending with unapproved coolant can cause damage to the engine and heater.
- Do not abort the heater shutdown prematurely, e.g. by actuating the battery disconnect switch or by using a battery management system, except in the event of an emergency shutdown.
- Before the heater is installed again in another vehicle, rinse the heater parts carrying water with clean water.

**NOTE**

- In the event of a shutdown by a battery management system, the shutdown of the heater must be ensured under all circumstances - except in the event of an emergency shutdown.
- All deviations from the safety requirements for installation and operation are to be agreed with the manufacturer in writing before they are implemented.
- Following installation, attach the "Switch off heater before refuelling!" sticker near the tank filler neck.

## 1.12 Accident prevention

Observe the general accident prevention regulations and the relevant workshop and operating safety instructions.

# 2 Product information

## 2.1 Scope of supply

| Figure No. | Designation | Order No. |
|---|---|---|
| 1 | Hydronic L3-16 – 24 volt | 25.3042.02.0000 |
| 1 | Hydronic L3-24 – 24 volt | 25.3043.02.0000 |
| 2 | Hydronic L3-24 – 24 volt, compact version [1)] | 25.3043.05.0000 |
| 1 | Hydronic L3-30 – 24 volt | 25.3040.02.0000 |
| 2 | Hydronic L3-30 – 24 volt, compact version [1)] | 25.3040.05.0000 |
| 1 | Hydronic L3-30 – 24 volt, HVO | 25.3116.02.0000 |
| 1 | Hydronic L3-35 – 24 volt | 25.3041.02.0000 |
| 2 | Hydronic L3-35 – 24 volt, compact version [1)] | 25.3041.05.0000 |
| 1 | Hydronic L3-30 – 24 volt, HVO | 25.3117.02.0000 |

[1)] Incl. water pump Flowtronic 5000 (25.2488.27.0000)

The following additional parts are required for operation of the heater:

- Additional parts for connection to the water circuit
- Additional parts for the fuel supply
- Additional parts for the exhaust system
- Control unit

**Additional parts which have to be ordered separately**

| Figure No. | Designation | Order No. |
|---|---|---|
| 3 | Water Pump, Flowtronic 5000 | 25.2488.26.0000 |
| 4 | Water Pump, Flowtronic 5000S | 25.1818.30.0000 |
| 5 | Water pump, Flowtronic 6000 SC | 25.2488.25.0000 |
| 7 | Hose elbow, ø 38 mm | 25.1799.80.0001 |
| 10 | Reducer, ø 38/28 mm | 25.1214.89.0019 |
| 11 | Hose clip, ø 32-39 mm | 10.2067.03.2050 |
| 12 | Pipe elbow, ø 38 mm | 25.1214.89.0003 |
| 13 | Water hose, ø 38 mm | 360.75.413 |
| 14 | Exhaust pipe socket, ø 70 mm | 22.1000.40.0400 |
| 15 | Exhaust pipe elbow, ø 70 mm | 22.1000.40.0300 |
| 16 | Fuel filter | 25.2599.05.0100 |
| 17 | Banjo bolt, M14 x 1.5 | 104.09.002 |
| 18 | Sealing ring, A14 x 18 | 323.16.006 |
| 19 | Fuel suction line, Ø 5 x 3, length: 800 mm | 25.2488.05.0400 |
| 20 | Screw, M14 x 1.5 | 266.42.004 |
| 21 | Ball bushing | 263.61.001 |
| 22 | Union nut, M14 x 1.5 | 116.09.003 |
| 23* | Fuel pipe, Cu, according to DIN 1786, Internal diameter Ø 6 | - - - - - - - |
| 24 | Fuel hose, Fuel hose, ø 5 x 3 | 360.75.350 |
| 25 | Hose clip, Ø 11 mm | 10.2068.01.1098 |
| 26 | Screw, M14 x 1.5 | 266.09.005 |
| 27 | Rubber buffer M6 x 10 Height: 15 mm | 20.1607.65.0002 |
| 28 | Fuel return line, Ø 5 x 3, length: 750 mm | 25.1698.05.0400 |
| 29 | Ball valve | 25.2488.05.0200 |
| 30 | Reducer coupling 8 / 6 | 266.00.026 |
| 31 | Orifice with hose connection<br>Hydronic L3-16/-24<br>Hydronic L3-30/-35 | <br>25.3042.15.0903<br>25.3040.15.0903 |
| 32 | 1 m flexible hose, ø 60 mm | 10.2114.31.0000 |
| 33 | Hose clip | 10.2067.05.0070 |
| 34 | Air hose fixing kit | 22.1000.50.0200 |
| 35 | Plastic grille | 22.1000.01.0040 |
| 36 | Nozzle holder | 22.1000.01.1400 |
| 37 | Nozzle | 22.1000.01.0035 |
| 38 | Hose connection nozzle | 22.1000.01.0005 |
| 39 | Adapter | 25.1226.89.0050 |

The fuel pipe must be bought from the aftermarket.

**NOTE**

- For control unit see price list or "Product Information" document.
- Parts without a figure number are small parts and are packed in a bag.
- Please refer to the “product information” document if any other parts are required for the installation.

## 2.2 Scope of supply – heater, installation kit and additional parts

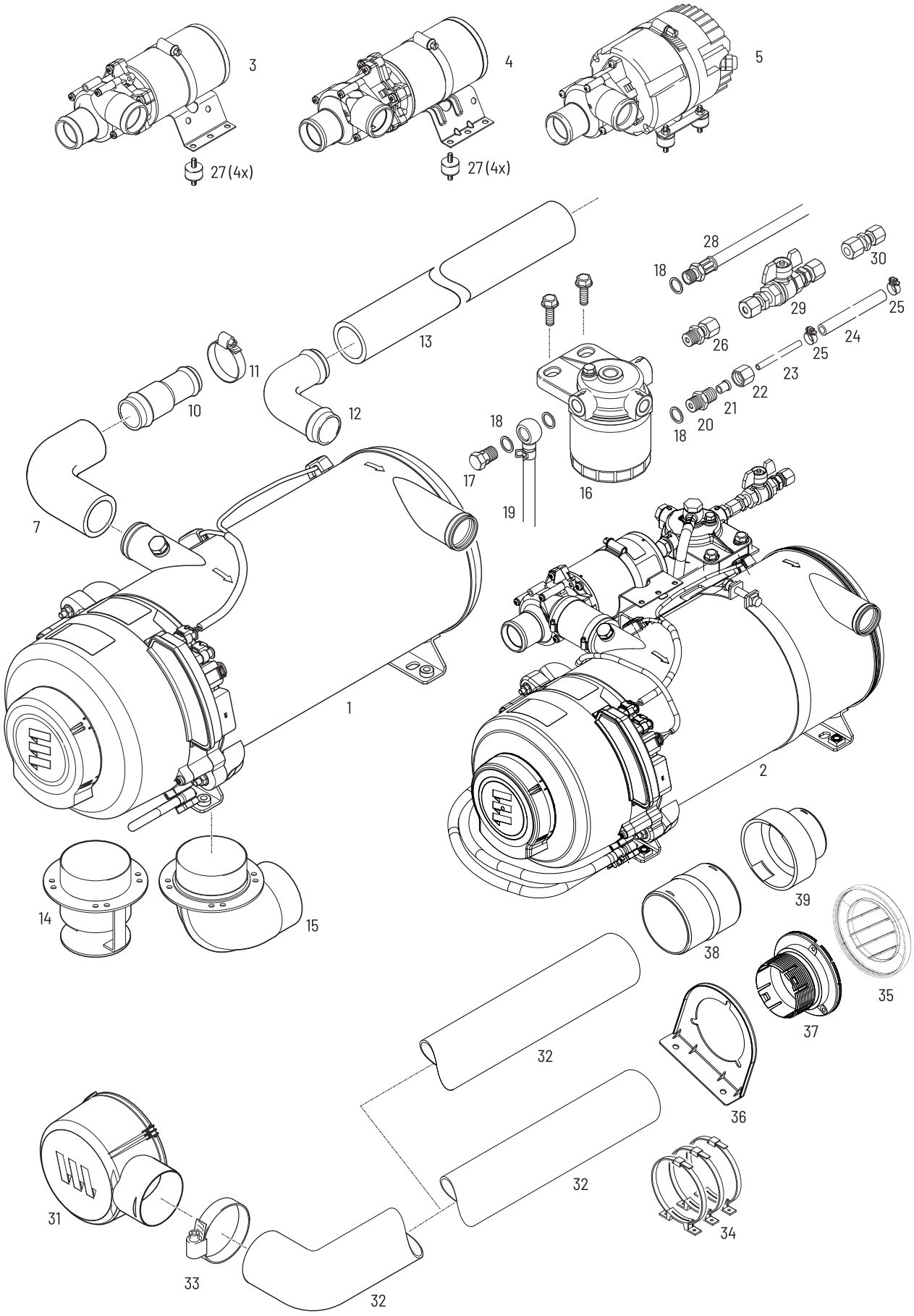

**Additional parts which have to be ordered separately**

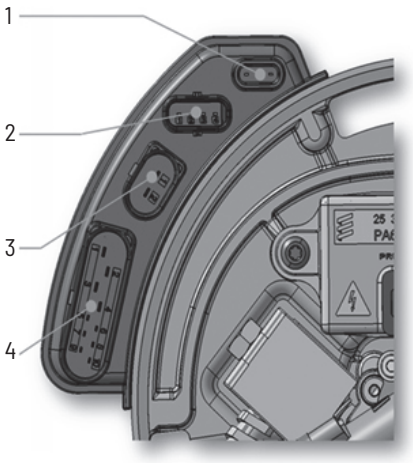


Figure 1
(1) Socket Combination temperature sensor heater
(2) Socket CAN control / EasyScan diagnostics
(3) Water pump power socket
(4) Heater socket

| Designation | Order No. | |
|---|---|---|
| Hydronic L3 connectors and connecting parts (without cable) kit<br><br>**NOTE**<br>The cables must be provided by the user during application. | 25.3040.89.0100 | • 4-pin plug housing and connecting parts for CAN control element or EasyScan diagnostics (2)<br>• 2-pin plug housing and connecting parts for water pump power supply (3)<br>• 10-pin plug housing and connecting parts for water pump main power supply (4) |
| Adapter cable for (2) the CAN control element EasyStart Pro or EasyStart Web | 25.3040.89.0200 | 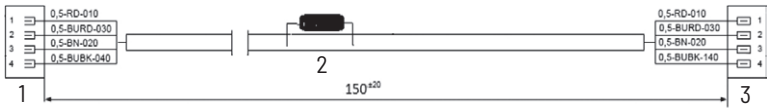<br>Figure 2<br>1 Connector plug for CAN control element<br>2 Resistor R = 120 Ω<br>3 Connector plug for CAN control element |
| Adapter cable for (2) EasyScan diagnostic tool | 25.3040.89.0300 | 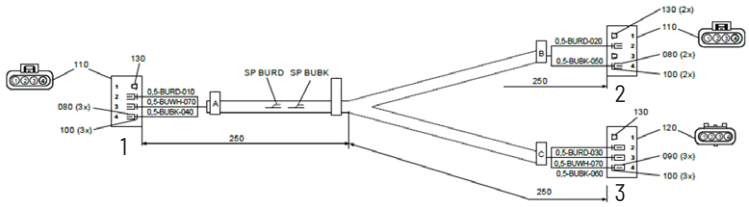<br>Figure 3<br>1 Heater connector<br>2 Plug for EasyScan diagnostic tool<br>3 Connector plug for CAN/LIN control element |

| | | |
|---|---|---|
| Accessory kit for (2) extension cable CAN control element<br><br>**NOTE**<br>The cables must be provided by the user during application. | 25.3040.89.0400 | 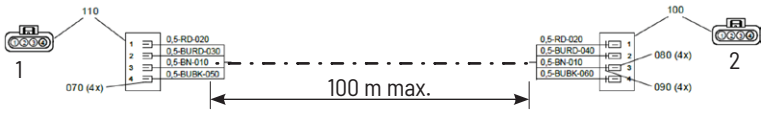<br><br>Figure 4<br>1 Connector plug for CAN control element<br>2 Connector plug for CAN control element |
| Adapter for (4) harness Hydronic L2 to main socket Hydronic L3<br><br>**NOTE**<br>Can only be used when using the S+ line. | 25.3040.89.0500 | 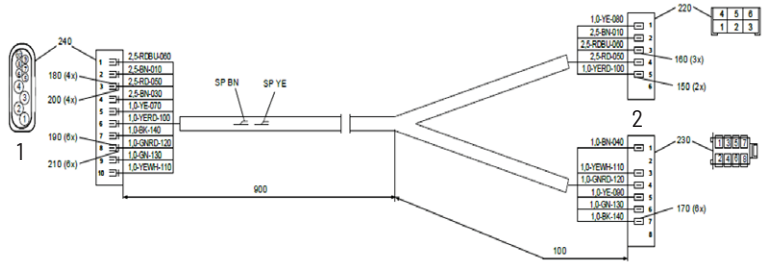<br><br>Figure 5<br>1 Connection plug for Hydronic L3 heater (4)<br>2 Connection plug for Hydronic L2 harness |
| Adapter for (3) power supply of water pump Flowtronic 5000/6000SC | 25.3040.89.0600 | 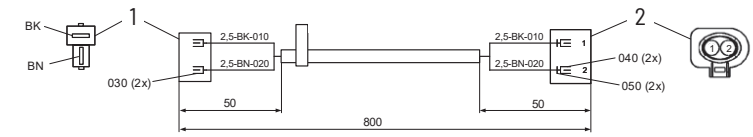<br><br>Figure 6<br>1 Plug housing 2-pin 0-180907-0 TYCO<br>2 Plug housing 2-pin 42121100 FEP |
| Adapter for (3) power supply of water pump Flowtronic 5000 ZSB | 25.3040.89.0700 | 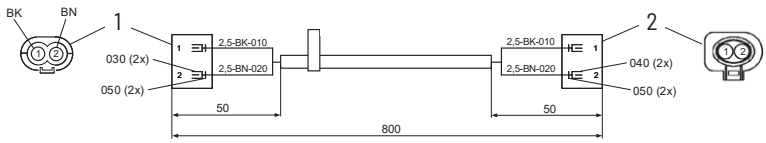<br><br>Figure 7<br>1 Plug housing 2-pin (W) 14546.501.699 Lear, waterproof<br>2 Plug housing 2-pin 42121100 FEP |
| Adapter for (3) power supply of water pump Flowtronic5000S | 25.3040.89.0800 | 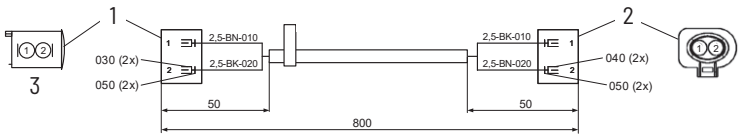<br><br>Figure 8<br>1 Plug housing 2-pin 1-9632101 AMP<br>2 Plug housing 2-pin 42121100 FEP<br>3 Plug housing, locked |

## 2.3 Technical data

### 2.3.1 Hydronic L3

| Heater | | | Hydronic L3 | | | |
|---|---|---|---|---|---|---|
| Version | | | -16 | -24 | -30 | -35 |
| Heat output (Watt) at ambient temperature –10 °C. | | | 16,000 | 24,000 | 30,000 | 35,000 |
| Fuel consumption (l/h) at ambient temperature –10 °C. | | | 1.9 | 2.7 | 3.15 | 3.7 |
| Average electrical power consumption (Watt), with nozzle preheating, Without water pump, without vehicle blower relay in operation | | | 65 | 85 | 95 | 110 |
| Fuel – more about fuel quality on page 30 | | | • Diesel – standard commercially available (EN 590)<br>• Heating oil EL | | | |
| | | | | | HVO – Hydrogenated Vegetable Oil [1] | |
| Heating medium | | | Mixture of water and anti-freeze (Proportion of anti-freeze at least 10 % up to 50 % maximum) | | | |
| Closed-circuit power consumption | | | 100 µA | | | |
| Rated voltage | | | 24 Volt | | | |
| Operating range, lower voltage limit: An undervoltage protector installed in the control box switches off the heater if the voltage limit is reached. [2] | | | 20 Volt Undervoltage protection response time: 20 seconds ±1 | | | |
| Operating range, upper voltage limit: An overvoltage protector installed in the control box switches off the heater if the voltage limit is reached. | | | 32 Volt Response time – Overvoltage protection: 20 seconds ±1 | | | |
| Allowable operating pressure [bar] | | | max. 2.5 | | | |
| Water volume in the heater [l] | | | 2.4 | | | |
| Water volume in the heating circuit [l] | | | min. 10 | | | |
| Minimum water flow rate of the heater (l/h) | | | 1400 | 2000 | 2500 | 3000 |
| Ambient temperature in °C | Heater | in operation | -40 to +85 [3] | | | |
| | | not in operation | –40 to +100 (short-term +125) | | | |
| Combustion air temperature in °C | | | max. 60 | | | |
| $CO_2$ values (% vol) | | | 9 – 11.5 | | | |
| CO in the exhaust | | | < 0.04 | | | |
| Smoke spot no. (Bacherach) | | | < 4 | | | |
| Radio interference suppression class | | | Suppression Class 3 according to DIN EN 55025 | | | |
| Degree of protection according to ISO 20653 | Heater | in operation | IP5k4k [4] | | | |
| | | not in operation | IP5k6k and IP5k9k [4] | | | |
| Weight – without coolant liquid and additional parts [kg]<br>– compact version | | | 16<br>23.5 | | | |
| Ventilation mode | | | possible | | | |
| External water pump control | | | possible | | | |

1) Approved for the Hydronic L3-30 and Hydronic L3-35 heaters in the HVO version.
2) The undervoltage limits of the heater must be taken into account when using and designing a battery management system. An installed battery management system may only switch off the heater's power supply below the voltage limits if the response time of 20 seconds ±1 second is taken into consideration.
3) -20°C for the Hydronic L3-30 and Hydronic L3-35 heaters in the HVO version.
4) The heater is protected against harmful quantities of dust, powerful water jet under increased pressure and water during high-pressure/steam cleaning (provided it is not in operation). The control box is dustproof, completely protected against powerful water jet under increased pressure and water during high-pressure/steam cleaning (provided it is not in operation).

**CAUTION!**
Failure to comply with the ambient conditions stated in the technical data can result in malfunctions.

**NOTE**
Unless otherwise specified, the technical data provided is with the usual tolerances of ±10 % (Hydronic L3-35: ±15 %) at rated voltage, 20 °C ambient temperature and reference altitude Esslingen.

### 2.3.2 Water pumps

**Flowtronic 5000**

| | | | |
|---|---|---|---|
| Pump type | | Flowtronic 5000 | |
| Heating medium | | Mixture of water and anti-freeze (Proportion of antifreeze at least 10 % up to 50 % maximum) | |
| Delivery rate | | 5200 l/h at 0.2 bar delivery pressure | |
| Operating pressure, water circuit | | 2 bar max. | |
| Weight (without bracket, clip and coolant) | | 2.04 kg | |
| Rated voltage | | 24 Volt | |
| Operating range | | 20 – 28 Volt | |
| Power consumption at 5200 l/h and 0.2 bar discharge pressure | | 104 Watt | |
| Short-distance interference suppression | | Limit class 3 Radio interference field strength according to CISPR25 3rd 0.15 MHz – 1000 MHz. According to DIN 57879 / Part 1 VDE 0879 | |
| Degree of protection | | IP 5K4 | |
| Electrical protection for external control | | 15 A | |
| Temperature conditions | Heating medium | –40 °C to 90 °C | short-term (15 min) +115 °C |
| | Ambient, operation | –40 °C to 90 °C | short-term (15 min) +115 °C |
| Dry running | | No | |
| Blocking | | The motor remains undamaged within a period of max 6 seconds. | |
| Shaft-pump wheel connection | | Mechanical seal | |

**CAUTION!**
Failure to comply with the ambient conditions stated in the technical data can result in malfunctions.

**NOTE**
- Provided no other values are given, the technical data provided is with the usual tolerances of ±10 % at rated voltage, 20 °C ambient temperature and reference altitude of Esslingen city.
- The Flowtronic 5000 water pump is installed in compact model heaters.
- The water pumps must be assigned to the heaters depending on the minimum throughput and cooling water volume.

**Pumping and pressure loss characteristic curves**

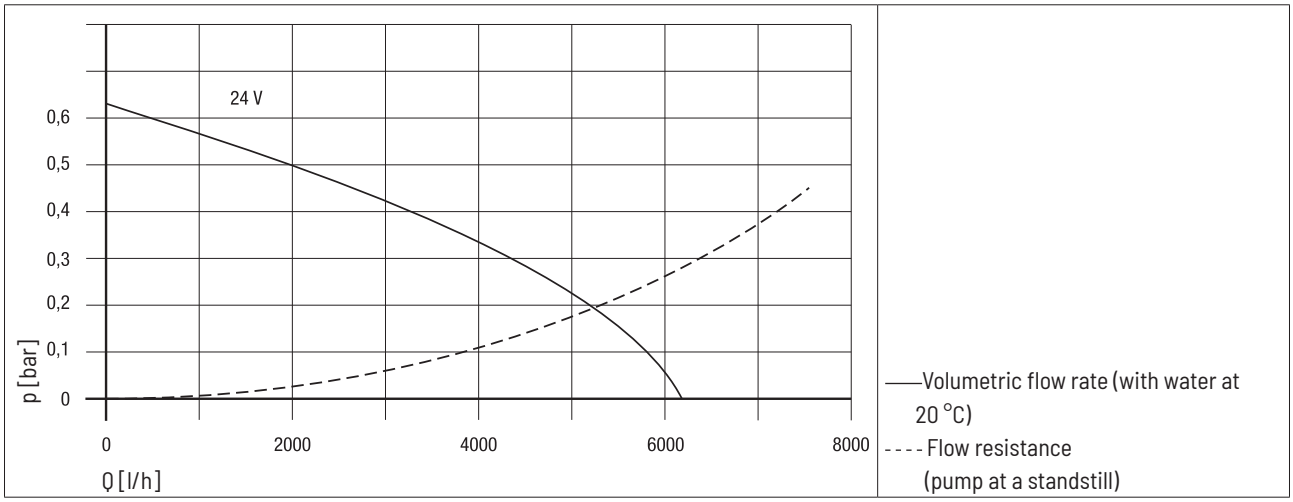

**Flowtronic 5000 S**

| | | | |
|---|---|---|---|
| Pump type | | Flowtronic 5000 S | |
| Heating medium | | Mixture of water and anti-freeze (Proportion of antifreeze at least 10 % up to 50 % maximum) | |
| Delivery rate | | 5200 l/h at 0.2 bar delivery pressure | |
| Operating pressure, water circuit | | 2 bar max. | |
| Weight (without bracket, clip and coolant) | | 2.2 kg | |
| Rated voltage | | 24 volt | |
| Operating range | | 20 – 28 volt | |
| Power consumption at 5200 l/h and 0.2 bar discharge pressure | | 104 Watt ±10 % | |
| Short-distance interference suppression | | 1 for VHF, 5 for SW, 2 for MW and LW according to DIN 57879 / Part 1 VDE 0879 | |
| Degree of protection | | IP 54A according to DIN 40 050 Sheet 1 | |
| Electrical fuse protection for external control | | 15 A | |
| Temperature conditions | Heating medium | –40 °C to 90 °C | short-term (15 min) +115 °C |
| | Ambient, operation | –40 °C to 90 °C | short-term (15 min) +115 °C |
| Dry running | | No | |
| Blocking | | The motor remains undamaged within a period of max 6 seconds. | |
| Shaft-pump wheel connection | | Magnetic clutch | |

**CAUTION!**
Failure to comply with the ambient conditions stated in the technical data can result in malfunctions.

**NOTE**
- Provided no other values are given, the technical data provided is with the usual tolerances of ±10 % at rated voltage, 20 °C ambient temperature and reference altitude Esslingen.
- The water pumps must be assigned to the heaters depending on the minimum throughput and cooling water volume.

**Pumping and pressure loss characteristic curves**

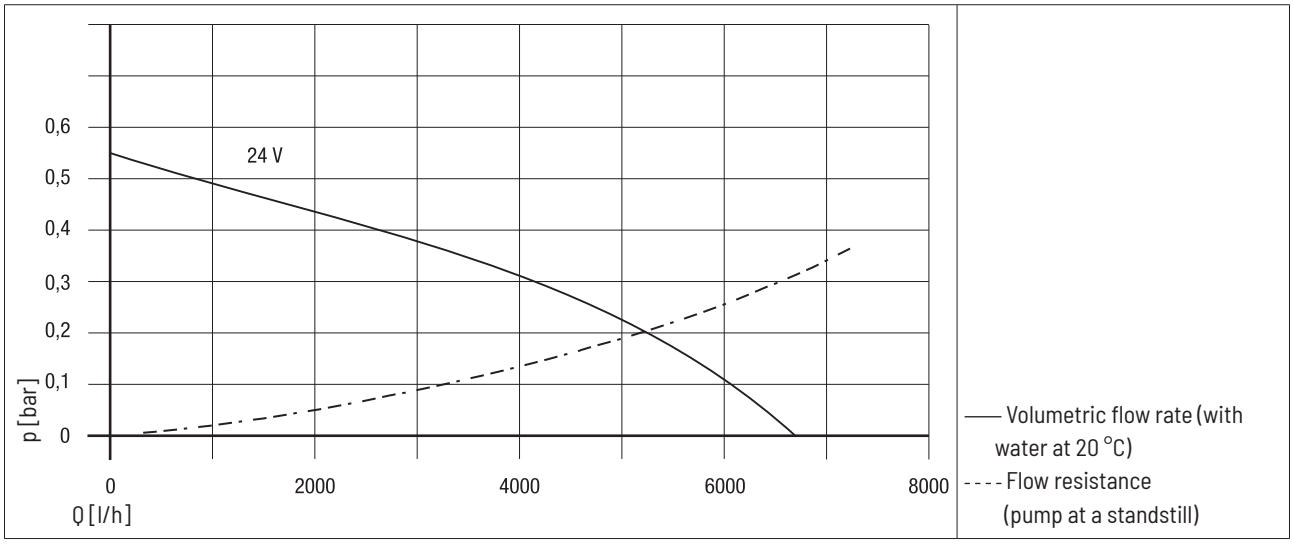

### Flowtronic 6000 SC

| | | | |
|---|---|---|---|
| Pump type | | Flowtronic 6000 SC | |
| Heating medium | | Mixture of water and anti-freeze (Proportion of antifreeze at least 10 % up to 50 % maximum) | |
| Delivery rate | | 6000 l/h ±5 % at 0.4 bar delivery pressure | |
| Operating pressure, water circuit | | 2 bar max. | |
| Weight (without bracket, clip and coolant) | | 2.5 kg | |
| Rated voltage | | 24 volt | |
| Operating range | | 18 – 32 volt | |
| Power consumption at 5200 l/h and 0.2 bar discharge pressure | | 210 watt | |
| Short-distance interference suppression | | 5 for LW, MW, SW1, SW2, VHF according to DIN EN 55 025 | |
| Degree of protection | | IP 25 (encapsulated electronics) according to DIN 40 050, Part 9 | |
| Electrical fuse protection for external control | | 15 A | |
| Temperature conditions | Heating medium | –40 °C to 90 °C | short-term (15 min) +115 °C |
| | Ambient, operation | –40 °C to 90 °C | short-term (15 min) +115 °C |
| Dry running | | approx. 45 min. – the motor switches off after approx. 45 min. | |
| Blocking | | Yes – the starting attempts are continued without limit. | |

**CAUTION!**
Failure to comply with the ambient conditions stated in the technical data can result in malfunctions.

**NOTE**
- Provided no other values are given, the technical data provided is with the usual tolerances of ±10 % at rated voltage, 20 °C ambient temperature and reference altitude Esslingen.
- The water pumps must be assigned to the heaters depending on the minimum throughput and cooling water volume.

### Pumping and pressure loss characteristic curves

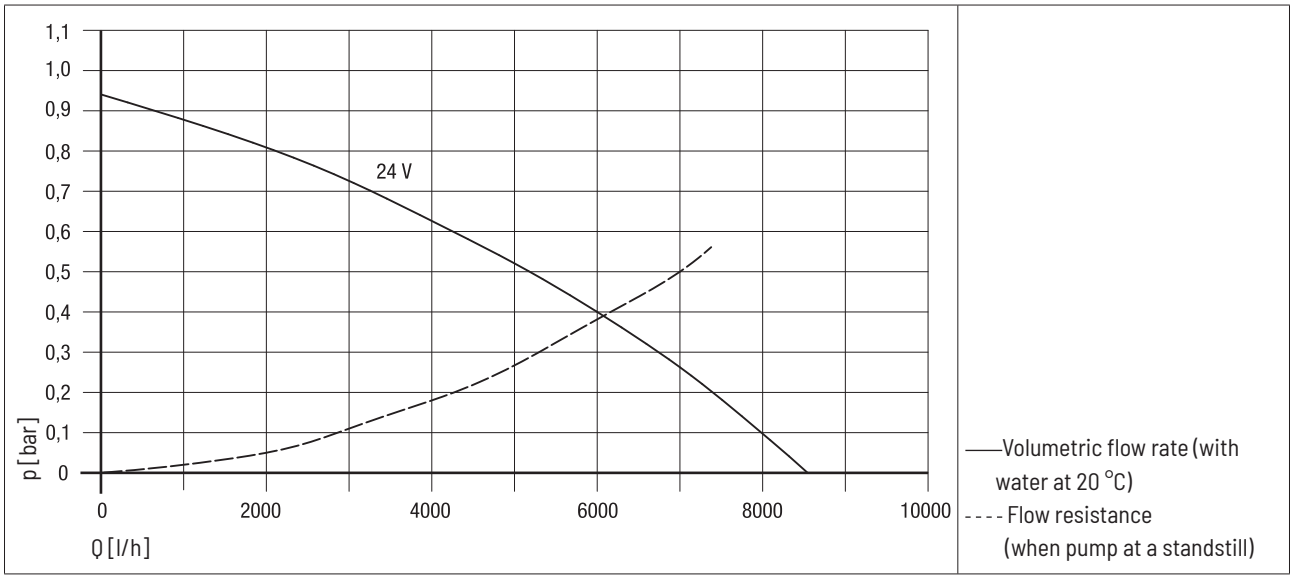

## 2.4 Main dimensions heater

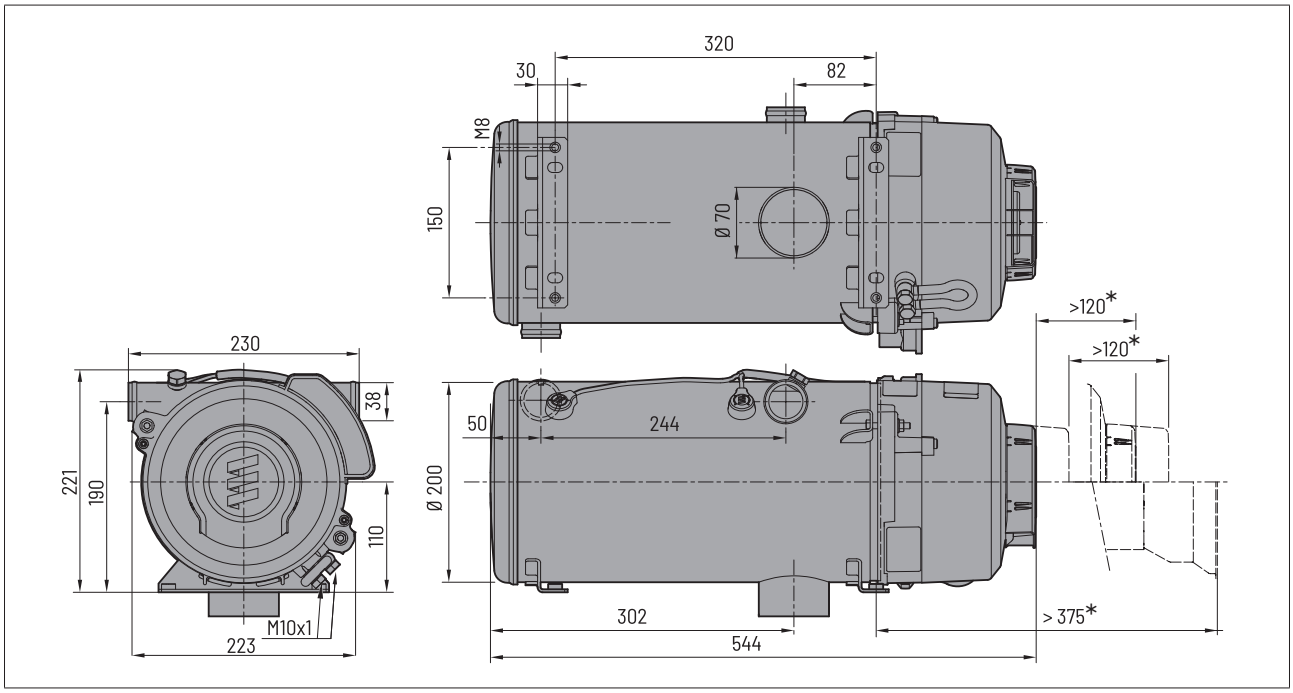


* See 3.4 “Installation location” on page 23

## 2.5 Main dimensions heater compact version

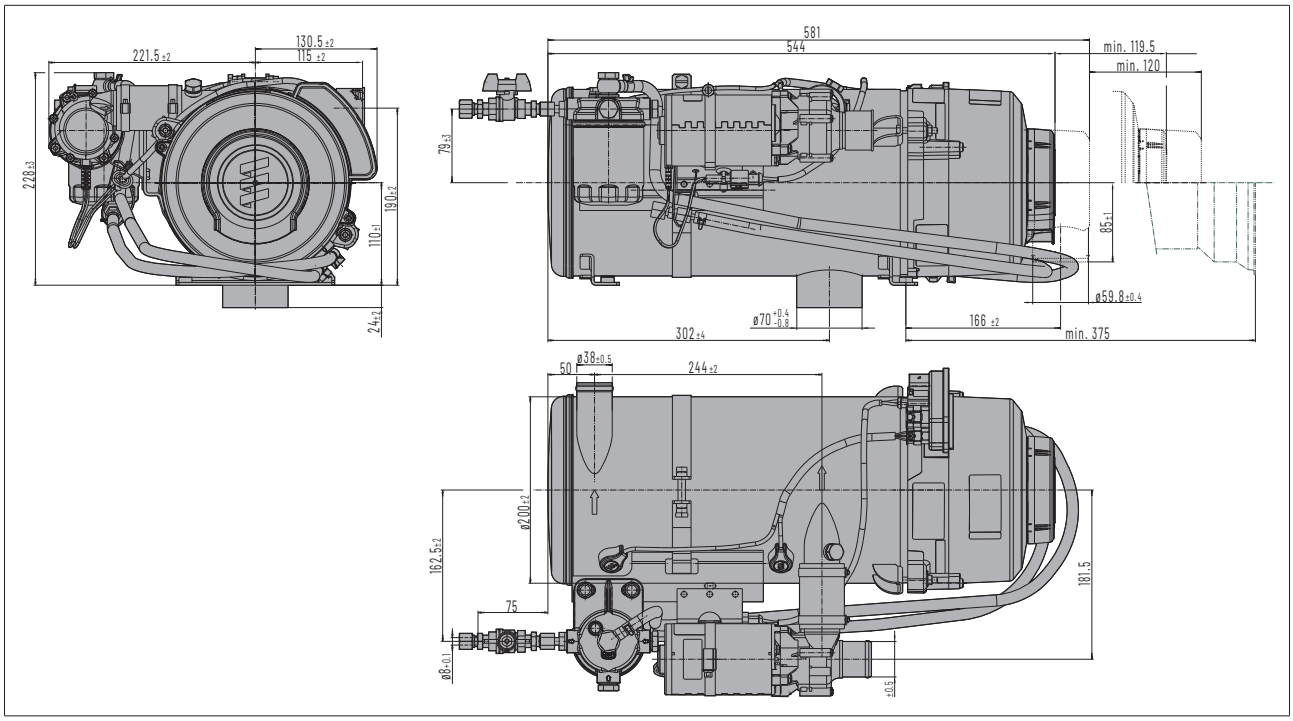

## 2.6 Main dimensions water pump

### 2.6.1 Flowtronic 5000

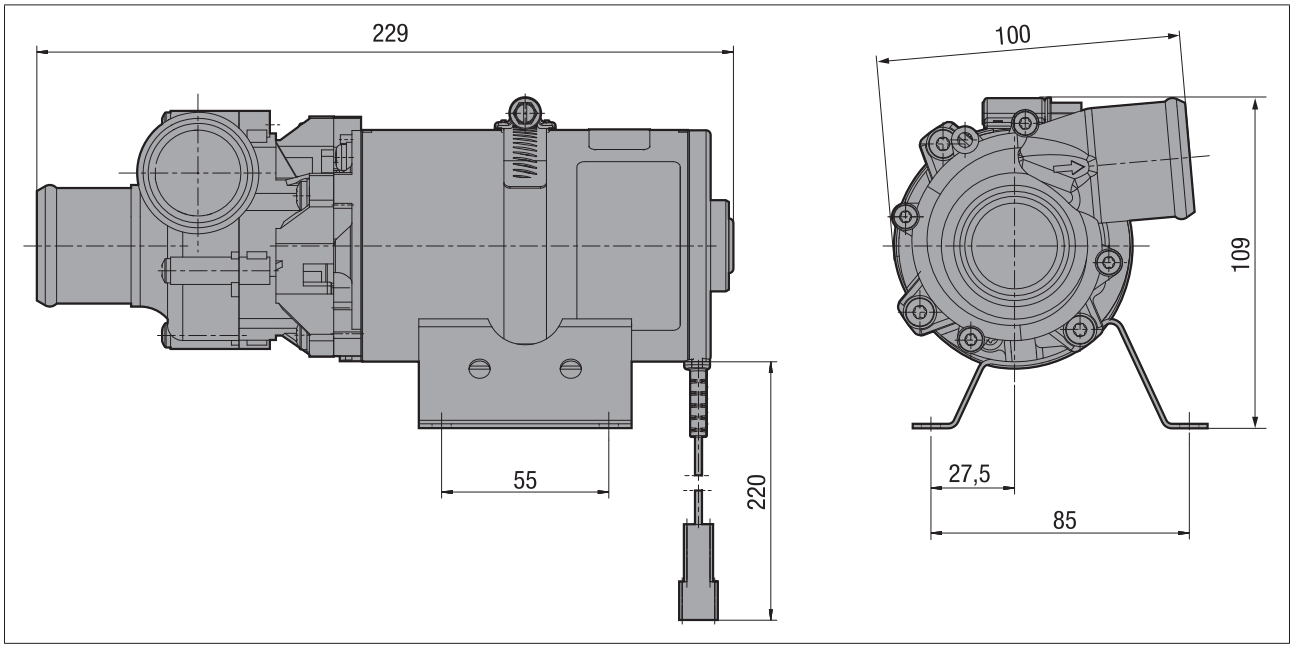


**Permissible installation positions and fastening of the water pump Flowtronic 5000**

The installation position of the water pump is horizontal. In this horizontal installation position, the water pump with its pump housing can be rotated as shown in the sketch below.

- Transfer the four fastening holes onto the mounting surface – as shown in the sketch of the main dimensions – and drill accordingly.
- If possible, fix the water pump onto the vehicle using 4 rubber buffers M6 x 10.

**NOTE**

- The laying of the connection lines must not cause any lateral strain forces to occur in the inlet and outlet connection sockets of the water pump (the connection sockets and connection lines must be in alignment).
- The installation clearance from adjacent components must be at least 10 mm.
- Please consult the manufacturer if a different installation position is required.

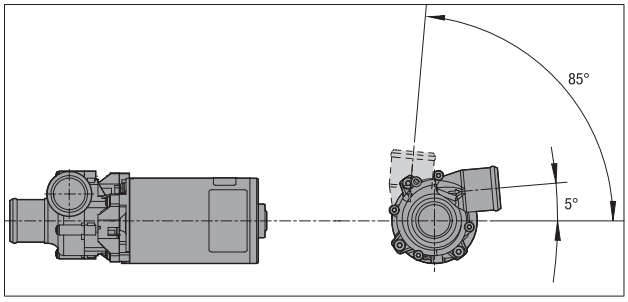


1 Preferred installation position
2 Permissible installation position

### 2.6.2 Flowtronic 5000 S

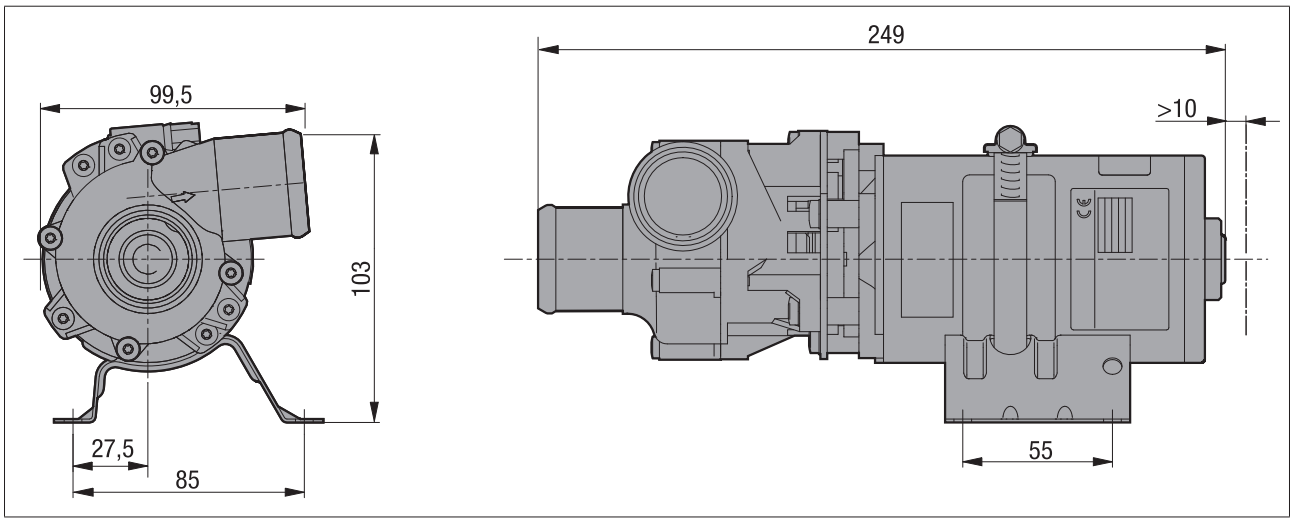


**Permissible installation positions and fastening of the water pump Flowtronic 5000S**

- The water pump should preferably be installed in a horizontal position.
- Transfer the four fastening holes onto the mounting surface – as shown in the sketch of the main dimensions – and drill accordingly.
- If possible, fix the water pump onto the vehicle using 4 rubber buffers M6 x 10.

**NOTE**

- The laying of the connection lines must not cause any lateral strain forces to occur in the inlet and outlet connection sockets of the water pump (the connection sockets and connection lines must be in alignment).
- The installation clearance from adjacent components must be at least 10 mm.

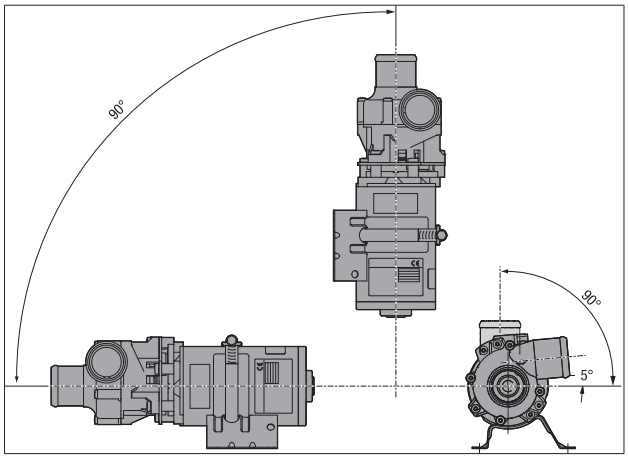


1 Preferred installation position
2 Permissible installation position

### 2.6.3 Flowtronic 6000 SC

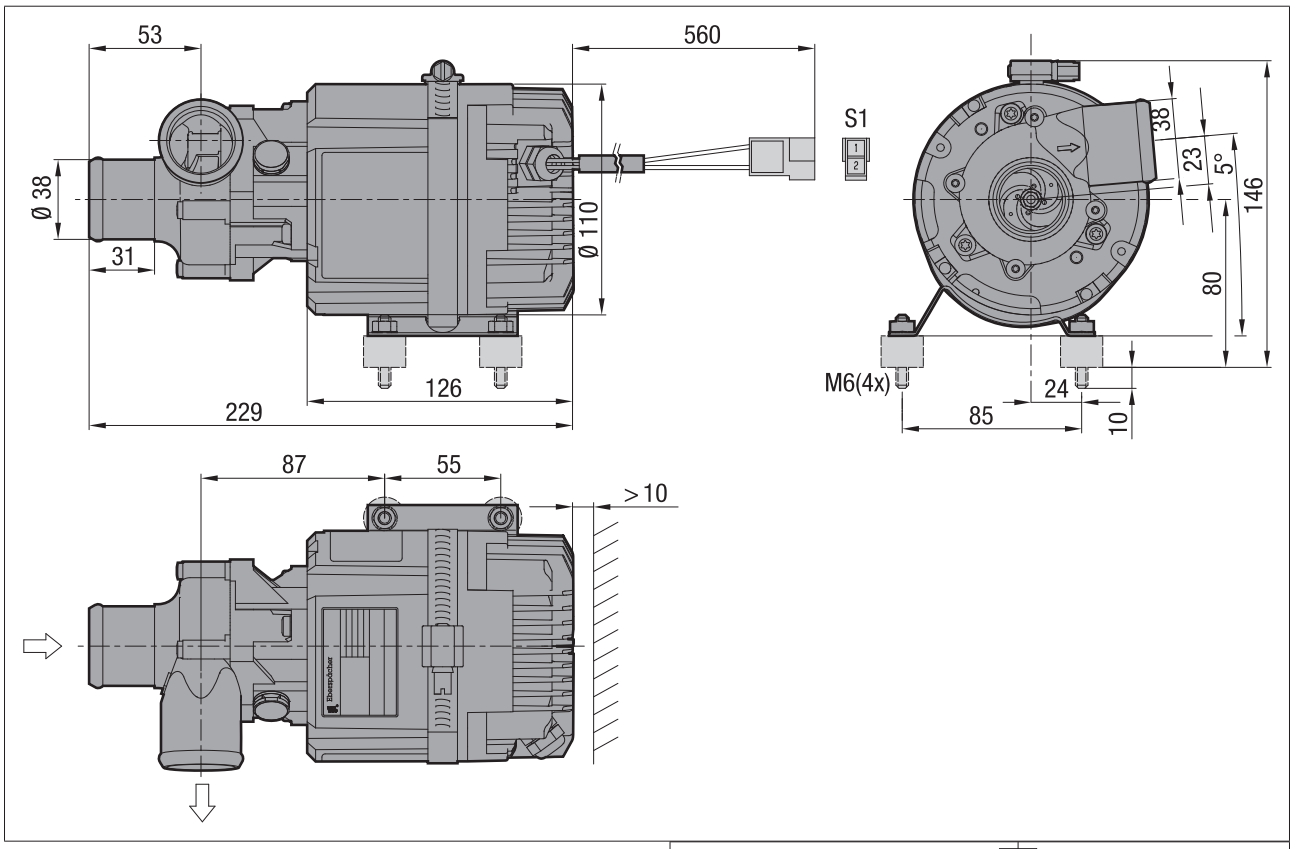


**Permissible installation positions and fastening of the water pump Flowtronic 6000SC**

- The water pump should preferably be installed in a horizontal position.
- Transfer the four fastening holes onto the mounting surface – as shown in the sketch of the main dimensions – and drill accordingly.
- Fix the water pump to the vehicle using the M6 rubber buffers included in the scope of supply.

**NOTE**

- The installation location of the water pump must be selected in such a way as to avoid a significant input of water and exhaust gas into the electric motor.
- The laying of the connection lines must not cause any lateral strain forces to occur in the inlet and outlet connection sockets of the water pump (the connection sockets and connection lines must be in alignment).
- The distance from adjacent parts must be at least 10 mm to ensure ventilation.

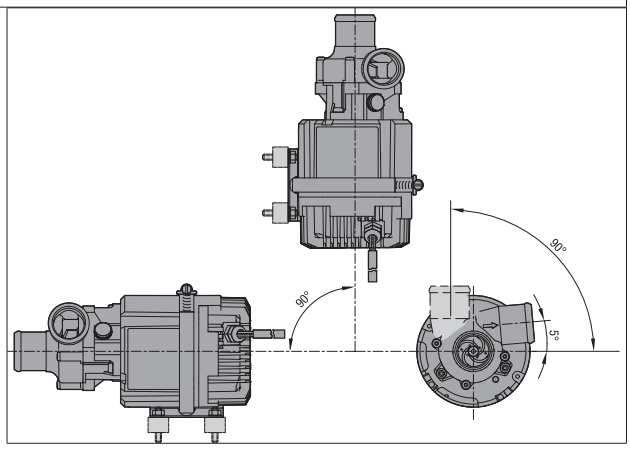


1 Preferred installation position
2 Permissible installation position

# 3 Installation

## 3.1 Mounting the heater

- The heater should be installed in a horizontal position.
- Transfer the four fastening holes and the through hole for the exhaust fitting onto the mounting surface – as shown in the sketch – and drill accordingly.
- Fix the heater with 4 screws M8 and 4 body washers.

**NOTE**

- The contact surface for the two fastening consoles of the heater must be flat.
- Depending on the installation conditions, the heater can be tilted at an angle as shown in the diagrams. In heating mode, the heater can deviate from the normal position by up to +15° in all directions as a result of the slanted position of the vehicle. These deviations do not affect the function of the heater.
- All installation positions deviating from the horizontal are not authorised. They must be agreed in writing with the manufacturer before installation.

## 3.2 Allowable mounting position of the evaporator

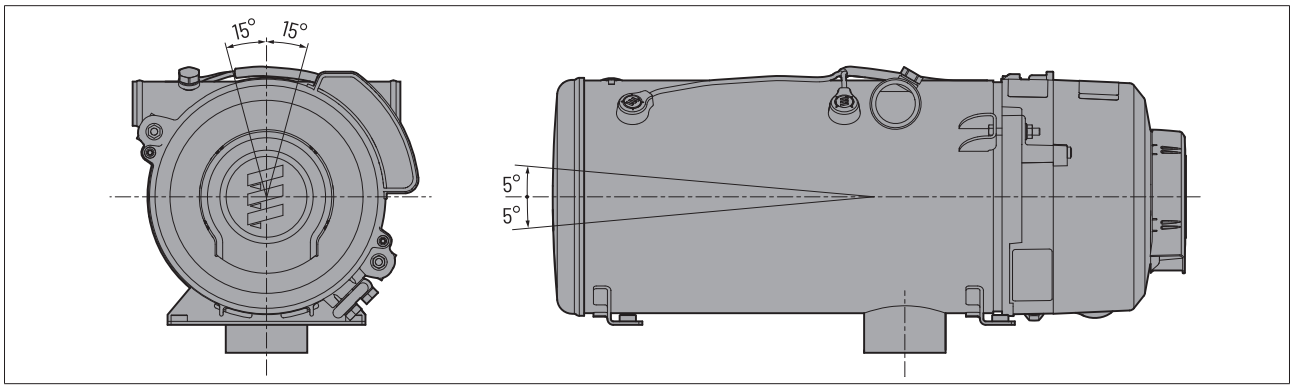


- Horizontal installation positions with allowable deviations.

## 3.3 Hole pattern heater

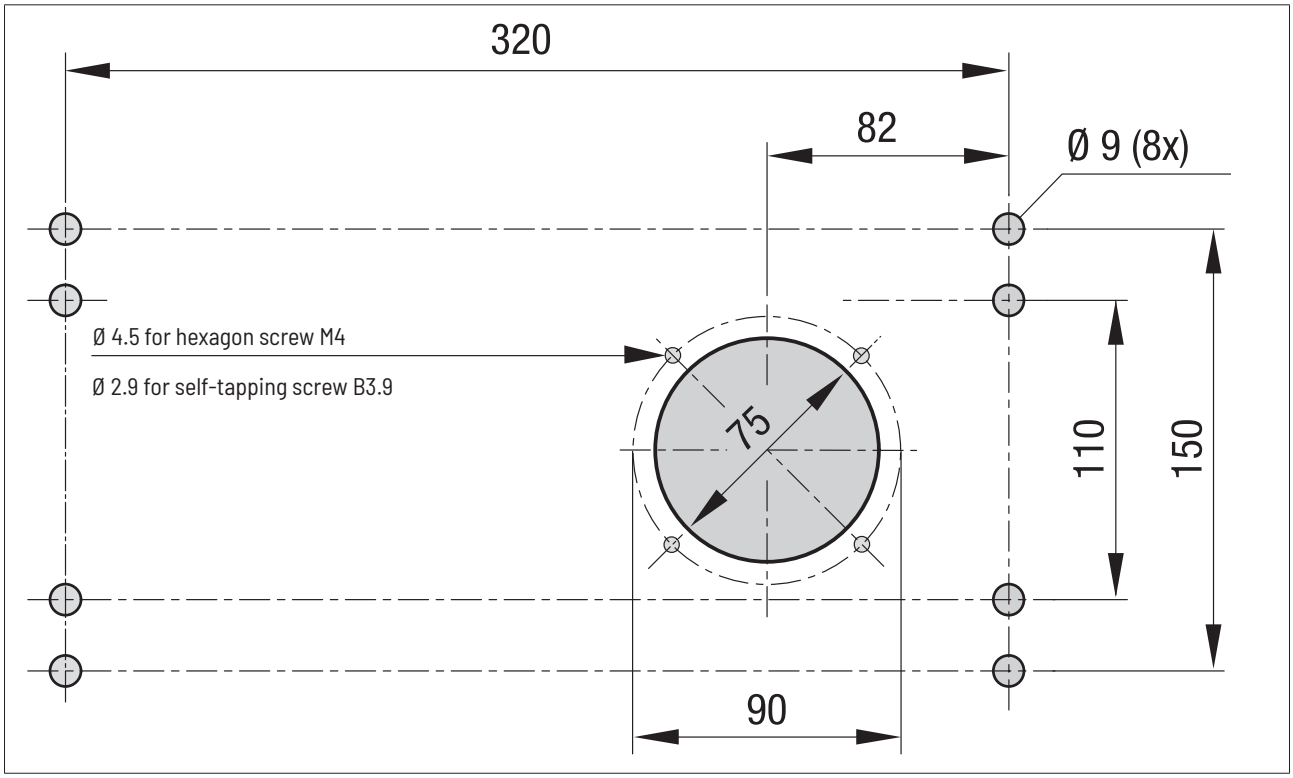

### 3.4 Installation location

- The heater and the water pump are integrated in the cooling water circuit of the vehicle or in a separate water circuit.
- The installation should be as recessed and splash-proof as possible in the vehicle, e.g. in the engine compartment or in a stowage space. This guarantees automatic ventilation of the heater and the water pump.

**NOTE**

If necessary, the heater or the water circuit can be vented using a screw on the heater, see 3.11.1 on page 28.

- Do not mount the water pump at the lowest point of the coolant liquid circuit, as otherwise the particles in the coolant liquid circuit settle in the water pump.
- When selecting the installation location, ensure that there is sufficient clearance for dismantling the cap (120 mm) and the flame tube (375 mm).
- Openings to the outside must be splash-proof.
- If the installation conditions are very tight or if the temperature is impermissibly high, a scoop with hose connection must be fitted for the intake of the combustion air. The combustion air is then sucked in through a flexible hose.
- This ensures that the combustion air is sucked in from an area in the right temperature range which is protected from dirt. A safety grille is to be fitted to the flexible hose.
- The installation suggestions made in the installation instructions are examples. Other installation locations are acceptable if they comply with the installation requirements stated in these installation instructions.
- When installing in the vehicle, always ensure that after fixing the heater, adjacent components do apply any force on the heater, neither under static nor under dynamic loading. Ideally, after installation a distance from adjacent components in the vehicle remains.

**NOTE**

**Additional notes on the location in rail vehicles**

- In rail vehicles the heater must be fixed in the engine compartment (e.g. locomotive) or under floor in the installation box on the vehicle body (e.g. motor coach).
- Other locations require an acceptance inspection by Eberspächer Climate Control Systems International GmbH.

#### 3.4.1 Installation example in a bus and in a rail vehicle

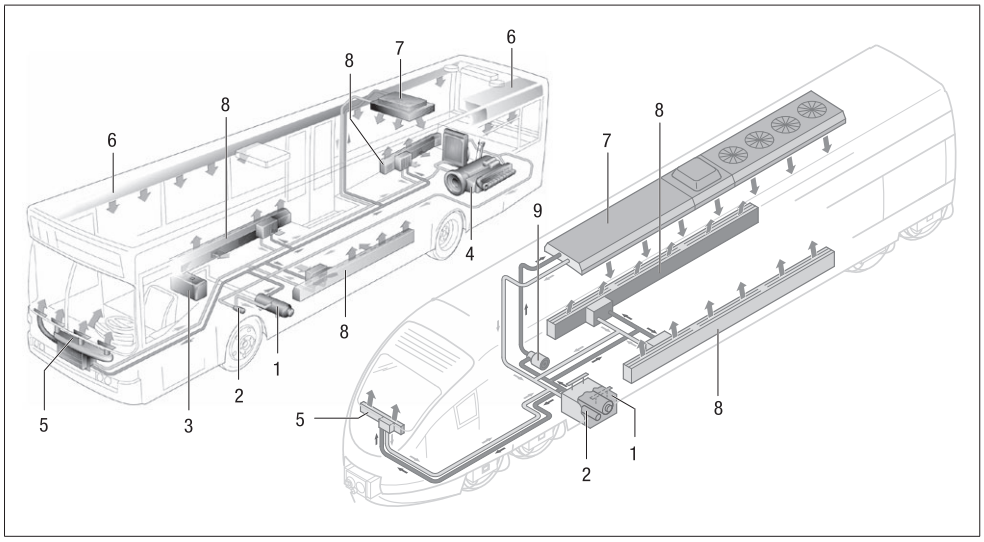


Figure 9
1 Heater
2 Water pump
3 Tank connector
4 Vehicle engine
5 Front heater
6 Roof air ducts
7 Roof heater
8 Floor heater
9 Additional water pump

**NOTE**

- Observe the legal regulations and the safety notes on this chapter content from page 9.
- Mount the heater under the minimum cooling water level (header tank, radiator, vehicle heat exchanger).
- If the heater is installed in a separately installed water circuit, an installation acceptance inspection by the heater manufacturer is always required.
  If this installation acceptance does not take place any warranty or liability claims whatsoever expire.
- It is not permissible to fix the heater in rail vehicles using metal-rubber buffers.
- Installation requirements (e.g. for boats and ships) are available from the manufacturer upon request.

### 3.5 Installing the heater in a box

If the heater cannot be installed in the engine compartment or in a stowage compartment of the vehicle, it can also be installed in a box.

- The box with the installed heater is then fixed to the vehicle at a suitable point e.g. longitudinal frame.
- For the intake of combustion air it is necessary to install a hat with a hose connection.
- The combustion air is then sucked in from outside the box through a flexible hose.
- This ensures that the combustion air is sucked in from an area in the right temperature range which is protected from dirt.
- A safety grille is to be fitted to the flexible hose.

#### 3.5.1 Installation example – heater in a box

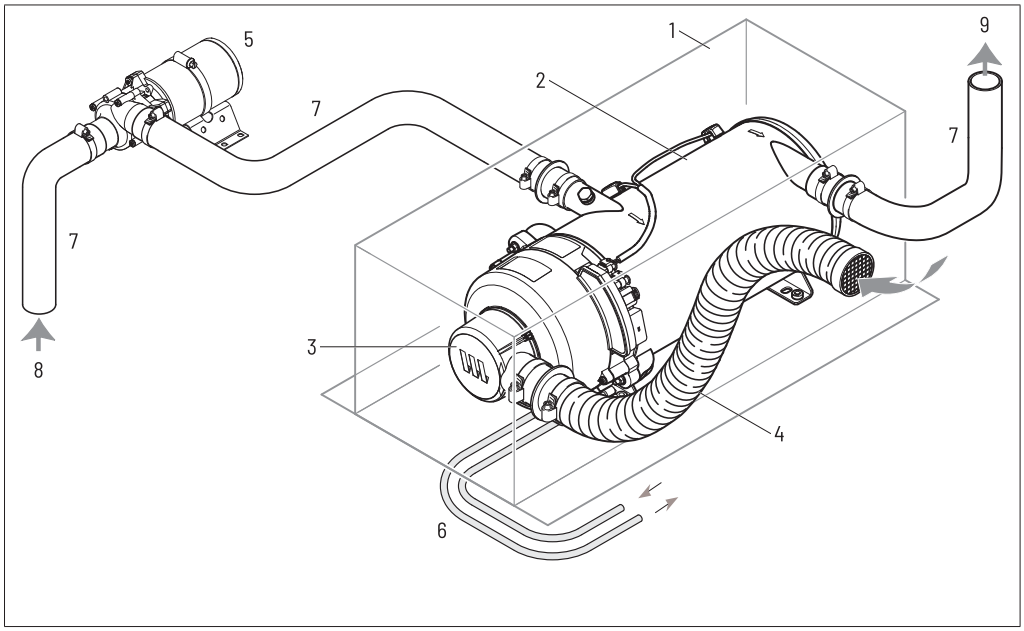


Figure 10
1 Box
2 Heater
3 Hat with hose connection
4 Flexible hose with safety grille
5 Water pump
6 Fuel lines
7 Water hose
8 Water inlet
9 Water outlet

**NOTE**

- Observe the legal regulations and the safety notes on this chapter starting on page 9.
- The box must be adequately ventilated from the outside so that the permissible ambient temperature is not exceeded.
- Ventilation openings must be positioned in the box in such a way that they cannot be clogged up by dirt and snow.
- Any water which penetrates the box must be allowed to drain off.

### 3.6 Installing the water pump

**NOTE**

Installation and connection of the water pump are described in the technical documentation of the respective product.

→ See the water pump installation instructions.

### 3.7 Nameplate

The nameplate stuck onto the heater must be protected against damage and must be easy to read when the heater is installed. If this is not the case the installer can stick a duplicate nameplate onto the heater or in the area of the heater in a position in which it is easy to see and read.

The duplicate nameplate is glued onto the shroud of the heater, and can be pulled off if necessary.

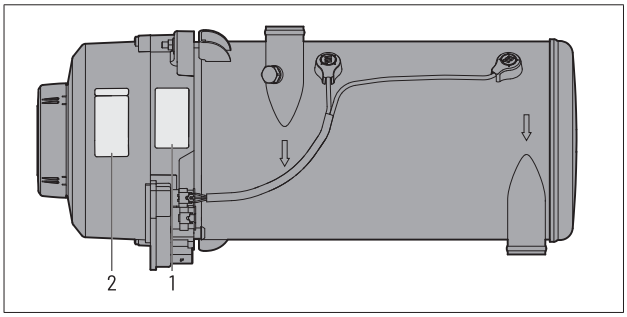


1 Original nameplate
2 Nameplate duplicate

**NOTE**

- Observe the legal regulations and the safety notes on this chapter starting on page 9.

## 3.8 Exhaust system

**DANGER!**

**RISK OF INJURIES AND BURNS!**

Every type of combustion produces high temperatures and toxic exhaust fumes. This is why the exhaust system must always be routed as described in these installation instructions.

→ Do not perform any work on the exhaust system while the heater is working.
→ Before working on the exhaust system, switch off the heater first and wait until all the parts have completely cooled down, wear safety gloves if necessary.
→ Do not inhale exhaust fumes.

**WARNING!**

**SAFETY INSTRUCTIONS FOR THE EXHAUST SYSTEM!**

**RISK OF BURNS!**

The entire exhaust system is very hot while the heater is running and immediately afterwards. This is why the exhaust system must always be routed as described in these installation instructions.

→ The exhaust pipe must end in the open air.
→ The exhaust pipe may not protrude beyond the lateral limits of the vehicle.
→ Install the exhaust pipe sloping slightly downwards, if necessary drill a drain hole approx Ø 5 mm at the lowest point as a condensation outlet.
→ The exhaust gas outlet under the vehicle vertically downwards is not permitted. An exhaust gas deflection is required. For optimised acoustics during the start-up phase, the manufacturer recommends a minimum length of 45 cm for the exhaust gas duct including exhaust gas deflection.
→ Important functional parts of the vehicle may not be impaired (maintain sufficient clearance).
→ Mount the exhaust pipe with sufficient clearance to heat-sensitive parts. Pay particular attention to fuel pipes (made of plastic or metal), electrical cables and brake hoses etc.!
→ Exhaust pipes must be safely fixed (recommended clearance of 50 cm) to avoid damage from vibrations.
→ Lay the exhaust system so that the outflowing exhaust gases are not drawn in as combustion air.
→ The mouth of the exhaust pipe must not become clogged with dirt and snow. In particular for machines and trucks in the construction sector and agricultural machines, ensure that dust, sand or similar cannot penetrate the exhaust system or the mouth of the exhaust pipe. In case of marine applications, ensure that water cannot penetrate the exhaust system or the mouth of the exhaust pipe.
→ The mouth of the exhaust pipe must not point in the direction of travel.
→ Align the outlet of the exhaust pipe so that the discharge of the exhaust is not prevented by backpressure (wind/airstream). Backpressure increases the temperature in the heat exchanger and causes component damage.
→ Always fix the exhaust silencer to the vehicle.
→ Lay the exhaust system so that the exhaust fumes do not flow directly onto heat-sensitive components.
→ In rail vehicles, it is important to ensure that the exhaust opening does not point in one of the possible directions of travel (90° to the direction of travel).

### 3.8.1 Installing the exhaust system

- An exhaust pipe elbow or exhaust pipe elbow with diffuser must be attached to the exhaust pipe of the heater and fixed to the vehicle floor.
  Order No. of the exhaust system parts, see page 10.
- A rigid or flexible exhaust pipe, Ø 70 mm inner diameter, can be fixed onto the exhaust bend with a pipe clip to extend the length. Depending on the installation conditions, the exhaust pipe can be up to a maximum of 4 m long.
- A rigid exhaust pipe made of unalloyed or alloyed steel or a flexible exhaust pipe made of alloyed steel, inner Ø = 70 mm, is to be adapted to the respective application by the customer.
- If needed, the exhaust pipe and corresponding pipe clips must be purchased from a specialist store; the wall thickness of the rigid exhaust pipe must be at least 1 mm.
- After completion of the exhaust duct, attach a self-made end sleeve (see page 26) to the end of the exhaust pipe.

**NOTE**

- The exhaust system can be bent by 3 x 90° max., the total length is reduced by 0.5 m with each 90° bend.
- The exhaust pipe end should be much shorter than the flexible exhaust pipe from the heater to the exhaust silencer.
- Use pipe clips to fix the exhaust pipe to the vehicle floor at suitable places.
- To avoid contact corrosion, the clips for fixing the exhaust pipe must be made of stainless steel. For the Order No. of the fixing clips, refer to the "Product Information" document.
- Comply with the statutory regulations and safety instructions of this chapter on page 6.

### 3.8.2 Example for the exhaust duct

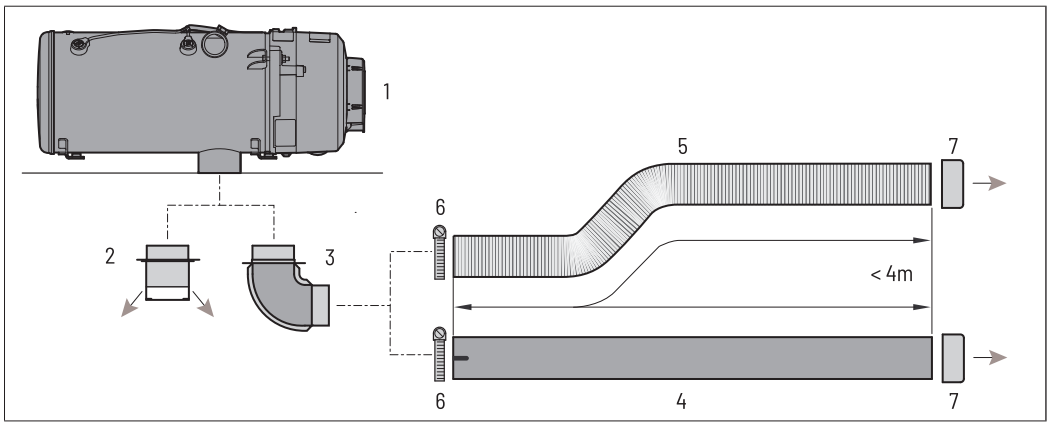


Figure 11
1 Heater
2 Exhaust pipe connections
3 Exhaust pipe elbow 90°
4 Exhaust pipe
5 Flexible exhaust pipe
6 Pipe clamp
7 Metal end sleeve

**NOTE**
- Items 4 – 6 must be purchased from a specialist store.
- Item 7: A metal end sleeve with connecting tabs for the exhaust pipe must be made by the customer if required.
- The metal end sleeve must not dampen the exhaust gas in such a way that soot is formed.

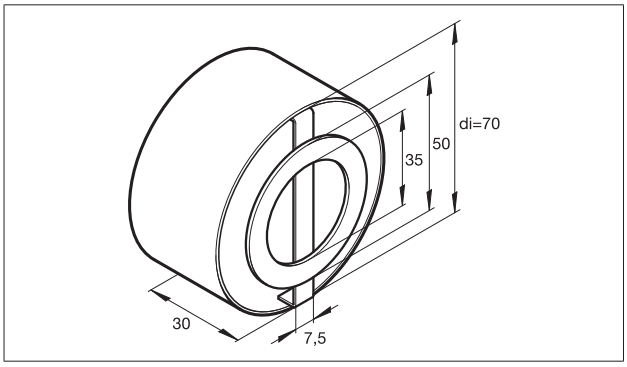


### 3.9 Combustion air duct

**WARNING!**

**SAFETY INSTRUCTIONS FOR THE COMBUSTION AIR SYSTEM!**
- The combustion air may not be drawn in from rooms in which there are people.
- The combustion air opening must remain free at all times.
- Lay the combustion air inlet in such a way
  - that exhaust gases cannot be drawn in as combustion air.
  - that fuel fumes that may occur cannot be drawn into the fresh air intake of the vehicle or heater.
- Do not direct the combustion air intake against the vehicle's airstream.
- The combustion air intake must not become clogged with dirt and snow. In particular for machines and trucks in the construction sector and agricultural machines, ensure that dust, sand or similar cannot penetrate the combustion air system or inlet. In case of marine applications, ensure that water cannot penetrate the combustion air system or inlet.
- Install the combustion air system sloping slightly downwards. If necessary, make a drain hole approx. Ø 5 mm at the lowest point to drain off condensation.
- If necessary, use fastening clips or cable ties to fix the flexible combustion air hose to the vehicle in suitable places.

- If the heater is installed near the vehicle tank in a joint installation space, the combustion air must be drawn in from the outside air and the exhaust must be routed to the outside air.

  The openings must be made splashproof.
- In rail vehicles it is important to ensure that the combustion air opening does not point in one of the possible directions of travel (Recommendation: 90° to the direction of travel).

**NOTE**
Note and follow the regulations and safety instructions for this chapter on page 7.

**Combustion air intake**
The combustion air is routed to the burner in the heater via the hood. No installation work is necessary.

**NOTE**
- If the heater is installed in a box or the installation conditions are very confined and/or the temperature is unacceptably high, we recommend fitting a hood with hose connection for the combustion air intake. The combustion air is then sucked in through a flexible hose. This ensures that the combustion air is sucked in from an area in the right temperature range which is protected from dirt.
- A safety grille is to be fitted to the flexible hose.
- If a hood with hose connection is not used when the heater is installed in a box, the combustion air must be sucked in through a ventilation opening with an effective minimum cross section which corresponds to a pipe with Ø 60 mm.
- The ventilation opening for the combustion air must be

positioned on the box so that it cannot become blocked by dirt and snow and exhaust gases cannot be sucked in.

### 3.9.1 Example for the combustion air system

- Combustion air intake through a gill plate.

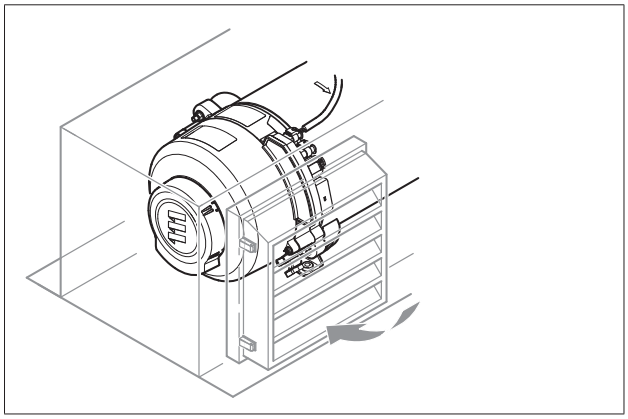

- Combustion air intake with a flexible hose Ø 60 mm, 1 m max. length.

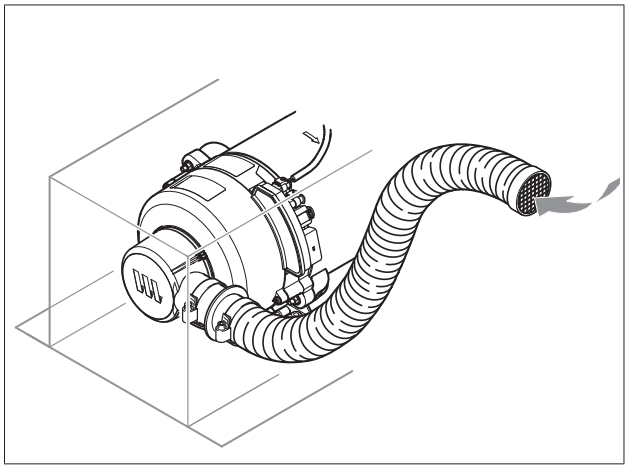

## 3.10 Installing the combustion air duct with hose connection

**NOTE**

- Note and follow the regulations and safety instructions for this chapter on page 6.

- Combustion air intake hose with a flexible pipe (di 60 mm) and other connection parts on page 10.

**Remove the cap**

> Remove the cap (1), included in the scope of delivery, using a wide blade screwdriver or similar tool.

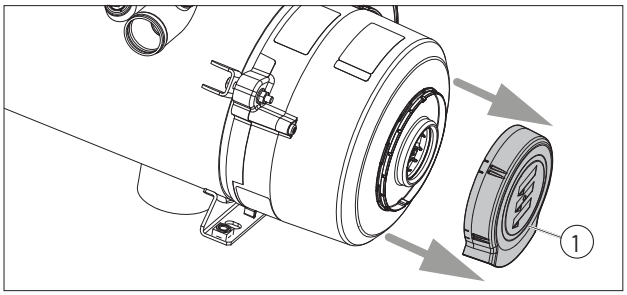


1 Cap Hydronic L3

**Insert cap with hose connection**

> Position the cap with hose connection (2) by hand, align and press firmly until it engages (grid: 22.5° increments).

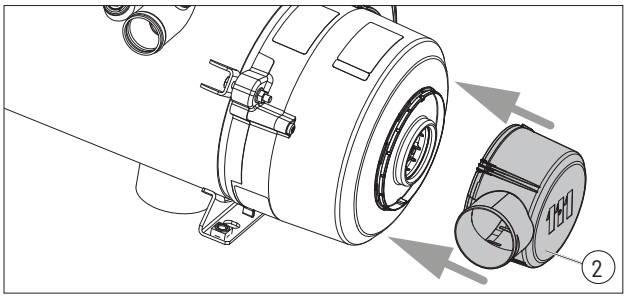


2 Cap with hose connection

**Attach air hose**

> Push the air hose Ø 60 mm (4) onto the hose connection and fasten with a hose clamp (3) (tightening torque 3+0.5 Nm), hose length max. 1 m.
> Lay the air hose and fasten it at a maximum distance of 50 cm using air hose fasteners.
> Attach the plastic grille (5) to the suction opening at the end of the hose.

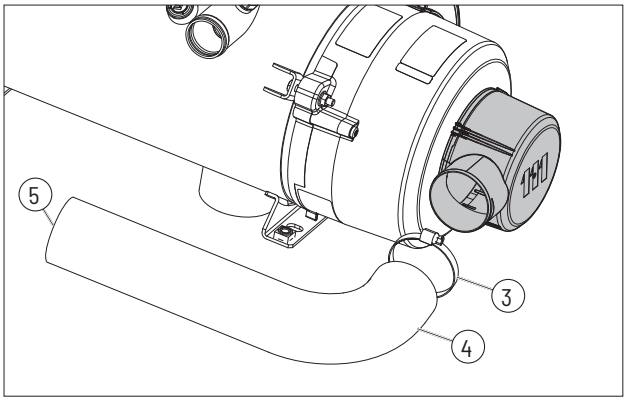


3 Hose clamp
4 Air hose
5 Plastic grille

> If necessary, shorten the flexible pipe according to the installation conditions. Ensure a clean cut edge. Small cut-offs could block the combustion air fan.

**NOTE**

Application-related hose lengths > 1 m must be agreed with the manufacturer before installation.

### 3.11 Connection to the coolant liquid circuit

- The heater is integrated in the vehicle's cooling water circuit.
- An alternative installation option is to install the heater with its own cooling water circuit and an equalizing tank.

**WARNING!**

**RISK OF INJURIES AND BURNS**

- The coolant and components of the coolant circuit can reach high temperatures.

→ Install and fasten water-carrying parts in such a way that there is no temperature hazard for humans, animals or temperature-sensitive material due to radiation / contact.

- Before working on the coolant liquid circuit, switch the heater off and wait until all the components have cooled down completely, if necessary wear protective gloves.

**NOTE**

- When installing the heater, note the direction of flow of the coolant liquid circuit.
- The water hoses included in the Eberspächer scope of supply must be used. If not, the hoses used must at least conform to DIN 73411.
- Fill the heater and water hose with coolant liquid before connecting to the coolant liquid circuit.
- Route the water hoses without any kinks, and in a rising position if possible.
- When routing the water hoses, maintain sufficient clearance from hot vehicle parts.
- Protect all water hoses / water pipes from chafing and from extreme temperatures.
- Secure all hose connections with hose clips.
- After the vehicle has been running for 2 hours or has travelled 100 kilometres, re-tighten the hose clips.
- The minimum water flow rate is only guaranteed if the temperature difference of the heating medium does not exceed 10 K between the water inlet and water outlet during heating.
- Only overpressure valves with an opening pressure of min. 0.4 – max. 2 bar may be used in the coolant liquid circuit.
- The coolant liquid must contain at least 10 % antifreeze all year round as corrosion protection.
- The coolant liquid must contain sufficient antifreeze for low temperatures.
- Before initial commissioning of the heater or after changing the coolant liquid, the whole coolant liquid circuit including heater must be vented free of bubbles according to the instructions issued by the vehicle manufacturer.
- Proper ventilation can be identified by a water pump operating almost noise free. Poor ventilation can result in overheating of the resettable thermal cut-out in heating mode.
- Only top up with antifreeze approved by the vehicle manufacturer.
- Insert the water pump preferably in the water inlet line to the heater.
- Adjust heater and coolant circuit so that a coolant temperature of min. 60 °C can be reached within half an hour, otherwise the heat exchanger will produce too much condensate and the efficiency will be reduced.

#### 3.11.1 Bleeding the water circuit on the heater

If necessary, the heater or the water circuit can be vented using a screw on the heater.

- Unscrew the bleed screw (1) to bleed the water circuit.
- Dispose of the sealing ring (2). It must not be reused. Replace it with sealing ring part no. 25.2599.07.0002.
- After bleeding the system, screw the bleed screw back in with a new seal ring.
  Tightening torque 20 Nm +1Nm




1 Bleed screw

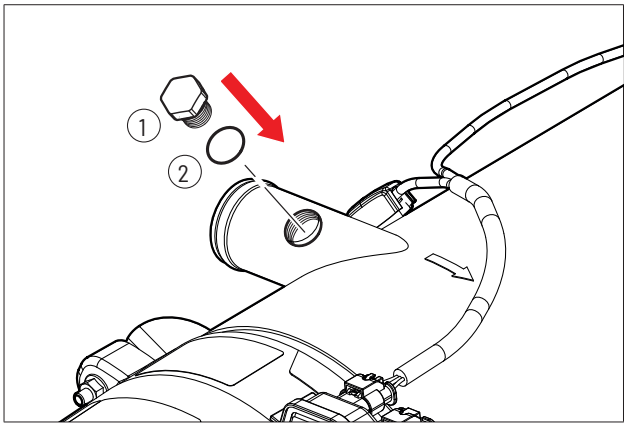


1 Bleed screw, tightening torque 20 Nm +1Nm
2 Sealing ring (Part No. 25.2599.07.0002)

### 3.11.2 Installation example for a water circuit

The diagram shows the heater integrated in the cooling water circuit of a bus or coach / rail vehicle.

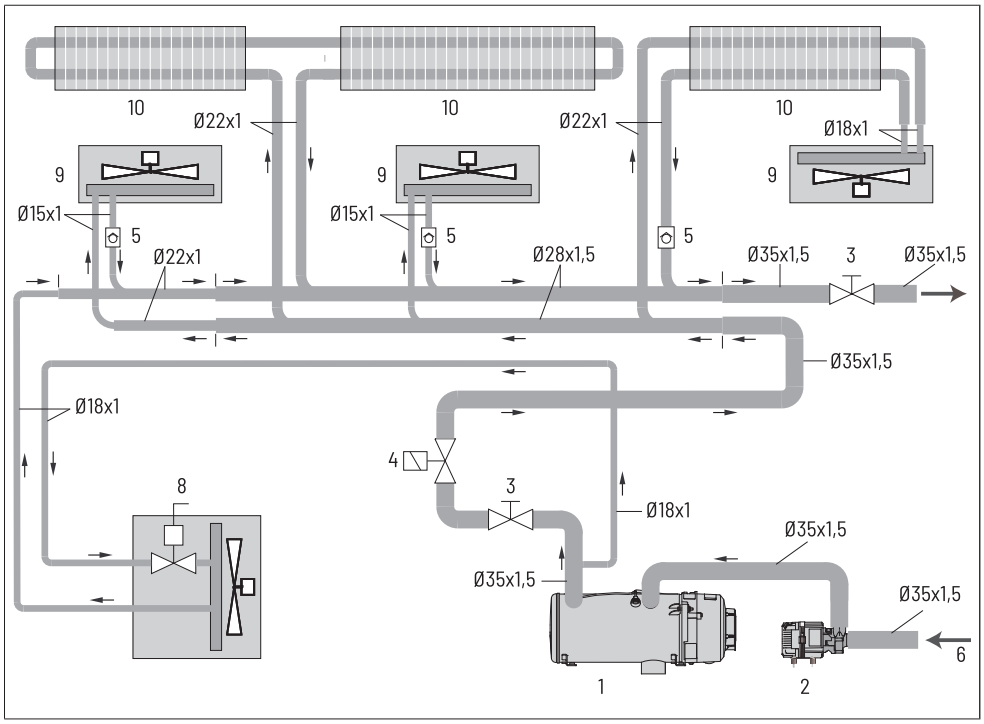


Figure 12
1 Heater
2 Flowtronic Water Pump
3 Shut-off valve
4 Electric shut-off valve
5 Non-return valve
6 From vehicle engine or equalization tank
7 To vehicle engine or equalization tank
8 Front heaters / Driver's cab
9 Space heaters
10 Convector heaters

### 3.12 Fuel supply

- The fuel is taken from the vehicle's fuel tank or a separate fuel tank.
- The following safety instructions must always be observed when laying the fuel lines and installing a fuel tank.
- Deviations from the instructions stated here are not allowed. Failure to comply can result in malfunctions.

**DANGER!**

**RISK OF FIRE, EXPLOSION, POISONING AND INJURY!**
**Caution when handling fuel.**
→ Switch off the vehicle engine and the heater before refuelling and before working on the fuel supply.
→ Avoid naked flames when handling fuel.
→ Do not smoke.
→ Do not inhale petrol fumes.
→ Avoid any contact with the skin.

**WARNING!**

**SAFETY INSTRUCTIONS FOR LAYING THE FUEL LINES!**
Always note and follow these safety instructions when laying the fuel lines. Deviations from the instructions are not allowed. Failure to comply can result in malfunctions.
→ To install the fuel hose at the heater, moisten it and push it carefully onto the fuel connection socket.
→ Use a sharp knife only to trim the fuel hoses and pipes. Interfaces must not be crushed (pressed in) and must be free of burrs.
→ The intake and return line must be filled with fuel when putting into service. The heater only works with vented pipes and lines (filter).
→ Fuel pipes must be securely fixed to avoid any damage and / or noise due to vibrations. Recommended guideline for fixing points: Fixing points at a distance of approx. 50 cm.
→ Fuel lines must be protected against mechanical damage.
→ Wherever possible, lay the fuel lines to the heater with a continuous rise.
→ Lay fuel lines in such a way that torsion of the vehicle, movements of the engine and the like do not have a disadvantageous effect on durability or fuel supply.
→ When installing tank connection, maintain a minimum distance of 5 mm from the end of the riser to the bottom of the tank.
→ Parts carrying fuel must be protected from interfering heat.
→ Use screw clamps to secure all hose connections of the fuel supply.
→ Never route or fasten the fuel lines directly along the heater or vehicle exhaust system. When systems cross, always ensure there is a sufficient heat clearance. If necessary, attach heat deflection plates.
→ Where fuel lines cross the exhaust system, always ensure sufficient thermal clearance, if necessary attach heat deflection plates.

→ Dripping or evaporating fuel must never be allowed to collect on hot parts or ignite on electric equipment.
→ When connecting fuel lines with a fuel hose, always install the fuel lines with a butt joint to prevent any bubbles from forming.

**SAFETY INSTRUCTIONS FOR FUEL LINES AND FUEL TANKS IN BUSES AND COACHES!**

- In buses and coaches, fuel lines and fuel tanks must not be routed through the passenger compartment or driver's cab.
- Fuel tanks in buses and coaches must be positioned in such a way that the exits are not in immediate danger if a fire occurs.

**NOTE**

- Note and follow the regulations and safety instructions for this chapter on page 7.
- Noise and abrasion protection: Sponge rubber hose for fuel lines available separately as an accessory (see product information).

### 3.13 Fuel quality

#### 3.13.1 Operation with diesel fuel

- The heater runs on standard commercial grade diesel fuel according to EN 590.
  - at outside temperatures above 0 °C, use diesel fuel according to EN 590;
  - at outside temperatures of 0 °C to -20 °C: use winter diesel fuel according to EN 590;
  - at outside temperatures of -20 °C to -40 °C, use Arctic diesel or Polar diesel.
- During the winter months the diesel fuel is adapted to the low temperatures of 0 °C to -40 °C. This means that problems can only arise if extreme drops in temperature occur – as is the case for the vehicle engine too – please refer to the vehicle manufacturer's instructions.

#### 3.13.2 Operation with HVO

**NOTE**

Applies only to the Hydronic L3-30 and Hydronic L3-35 heaters in the HVO version.

- The operation of the Hydronic L3-30 and Hydronic L3-35 heaters in the HVO version with Hydrogenated Vegetable Oil/HVO fuel in accordance with EN 15940 is permitted.
- When these fuels are used, the heating power is slightly reduced due to the slightly lower heating value of the fuel.
- Operating the heater with mixed DIN EN 15940 fuels in diesel fuel is also permitted as long as DIN EN 590 is observed.
- During the winter months the diesel fuel is adapted to the low temperatures of 0 °C to -20 °C. This means that problems can only arise if extreme drops in temperature occur – as is the case for the vehicle engine too. See the vehicle manufacturer's instructions.

**NOTE**

- In fuel-carrying components (e.g. hoses, connectors), a longer contact of some polymers / elastomers with HVO and GtL can cause shrinkage (e.g. cross-sectional narrowing).
- The Eberspächer heaters listed below and the associated Eberspächer installation kits use materials that tolerate permanent contact with HVO and GtL.

→ Eberspächer recommends to adhere to the specifications in the respective technical descriptions of the heaters, also with regard to the installation kits. Failure to comply makes the guarantee null and void and leads to the exclusion of any liability of Eberspächer Climate Control Systems International GmbH.

### 3.14 Heating oil operation with additional tank

- In special cases and at outdoor temperatures above 0 °C the heater can also be run on EL heating oil according to DIN 51603.
- If the heater is run from a separate tank, please comply with the following rules:
  - at outside temperatures above 0 °C, use diesel fuel according to EN 590;
  - at outside temperatures of 0 °C to -20 °C: use winter diesel fuel according to EN 590;
  - at outside temperatures of -20 °C to -40 °C, use Arctic diesel or Polar diesel.

**NOTE**

- Mixing of used oil **is not permissible**!
- After refuelling with winter or cold weather diesel the fuel lines must be filled with the new fuel by letting the heater run for 15 minutes!

### 3.15 Operation with biodiesel (FAME)

The heaters are not approved for operation with biodiesel fuel (FAME according to DIN EN 14 214).

### 3.16 Connection of the intake and return line to the heater

- If fuel hoses are used, the fuel hoses offered in the Eberspächer Climate Control Systems International GmbH delivery program must always be used.
- If this is not the case, the fuel hoses must comply with at least DIN 73379-1, type 3.
- Fire-resistant fuel hoses in accordance with DIN EN ISO 7840 must be used in the marine sector.
- When using fuel pipes made of metal, the materials used in motor vehicle construction, such as copper or steel, must be used in accordance with the respective sealing and connection technology.
- If plastic pipes are used, they must comply with DIN 73378 (made of soft-set, light- and temperature-stabilized PA 11 or PA 12) and be installed in compliance with the relevant connection technology.
- Permissible dimensions of the fuel lines
  Inner diameter of the suction and return lines:
  - For the connection to the ring hose nipple: ø 6 mm: min. ø 5 mm / max. ø 6 mm.
  - Special case when conncting to the ring hose nipple: ø 8 mm: min. ø 7 mm / max. ø 8 mm.

**NOTE**

- Installing a shut-off device in the return line is not allowed!
- Fuel hoses and fuel pipes are available as accessory parts, see accessories catalogue.
- Fuel lines with inside diameter ø 7 mm / ø 8 mm as well as ring hose nipples with ø 8 mm must be purchased from a specialist store.

### 3.17 Functional performance of the heater depending on the underpressure in the fuel system

In order to ensure the fuel pump works properly, it is necessary to ensure that the underpressure in the fuel system is not too high (see table).

| | Fuel pressure (P) Heater inlet | Fuel pressure (P) Filter inlet |
|---|---|---|
| Preferred range * | min. – 0.3 bar | min. – 0.2 bar |
| Allowable range ** | – 0.45 bar to – 0.3 bar | – 0.35 bar to – 0.2 bar |
| Critical range *** | – 0.55 bar to – 0.45 bar | – 0.45 bar to – 0.35 bar |
| Heating mode not possible | – 0.55 bar | – 0.45 bar |

* Preferred location for the fuel supply layout.
** Over the operating time, the counter pressure in the fuel supply may increase due to deposits (filter clogging).
*** Heater becomes susceptible to faults (gas bubble formation / fault code 52, 54).

**Permissible suction height and line lengths of the suction line (min. Ø 5 mm to max. Ø 8 mm):**
Suction head up to 1.5 m –> length max. = 25 m
Suction head 1.5 m to 4.0 m –> length max. = 15 m

**Permissible line length of the return line (min. Ø 5 mm to max. Ø 8 mm):**
max. length = 18 m

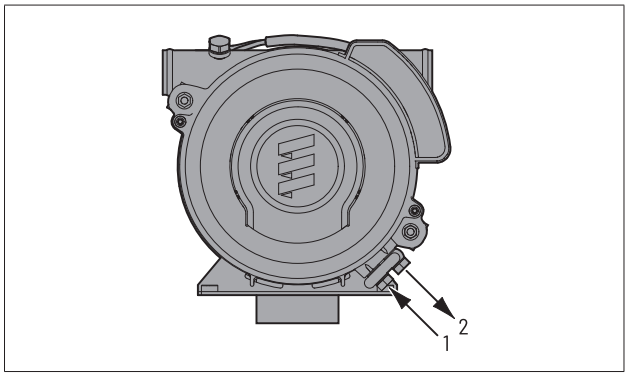


1 Connection of the intake line to the ring hose nipple ø 6 mm
2 Connection of the outlet line to the ring hose nipple ø 6 mm

## 4 Operation and Function

### 4.1 Structure of the heater

The heater consists of a heat exchanger and a removable burner. A combustion chamber consisting of a flame tube with integrated mixer is inserted in the heat exchanger. The flame tube can be pulled out of the heat exchanger if necessary.
The control box and electric motor are fixed to the burner flange under the burner hood. The fuel pump is integrated in the burner housing.

The following additional parts are required for operation of the heater:

- Water pump (already installed in compact version)
- Additional parts for connection to the water circuit
- Additional parts for the fuel supply
- Additional parts for the exhaust system
- Control unit

Order no. of additional parts see on page 10, for further additional parts see product information.

### 4.2 Operating instructions

The heater is controlled by the switch installed in the vehicle and/or by an Eberspächer control element. The control element is accompanied by a printed quick start guide and a detailed operating manual on CD.

**NOTE**
The service company or installation company gives the documentation / CD to the end user.

## 4.3 Operating modes

### 4.3.1 Heating

When the heater is switched on via the button in the vehicle or an EasyStart control element, the water pump starts up and the combustion air fan, ignition spark generator and fuel pump are started according to a fixed sequence. After the flame is detected, the ignition spark generator is switched off. The heat generated in the engine cooling water circuit is directed into the interior via the vehicle fan.

### 4.3.2 Parking ventilation

The vehicle blower is controlled directly by the control panel, bypassing the heating operation, in order to ventilate the interior of the vehicle, which is heated up in summer time, with fresh air just before the vehicle leaves.

### 4.3.3 Water pump control (external)

Only the water pump of the heater is activated (no outputs for relay, operating indicator or burner motor etc.) to

- direct the heat in the cooling water circuit through the vehicle fan into the interior until the operating mode is terminated while the engine is running,
- direct the residual heat in the cooling water circuit through the vehicle fan into the interior until the operating mode is terminated while the engine is running,
- When the water pump is requested at the end of the heating process, the heater switches to this mode.

**NOTE**
The "Heating" mode has a higher priority, so when a parallel request is made, e.g. heating and water pump activation at the same time, the heating mode is executed.

## 4.4 Initial commissioning of the heater

**NOTE**
Slight smoke and/or odours can develop during the initial commissioning of the heater. This is completely normal during the first minutes of operation and is not an indication of a malfunction.

The following points are to be checked by the company installing the heater during **initial commissioning**.

- Always read the operating and maintenance instructions before starting up the heater.
- Following installation of the heater, vent the cooling water circuit and the entire fuel supply system carefully. Comply with the instructions issued by the vehicle manufacturer.
- Open the coolant liquid circuit before the trial run (set the temperature control to "WARM").
- During the heater trial run, all water and fuel connections must be checked for leaks and secure, tight fit.
- If faults occur while the heater is running, use a diagnostic unit to determine and correct the cause of the fault.

## 4.5 Important instructions for operation

### 4.5.1 Safety checks before starting up the heater

- After a lengthy stoppage (summer months), check all components for secure fit (tighten screws where necessary).
- Carry out a visual check of the fuel system for leaks.

### 4.5.2 Before switching on

- Before switching on or pre-programming heating mode, switch the vehicle's heating control to "WARM" (maximum setting) and the fan to "slow level" (low electricity consumption).
- In vehicles with automatic heating, before switching off the ignition, switch the heating control to "MAX" and the required damper position to "OPEN".

### 4.5.3 Heating at high altitudes

Due to the integrated air pressure sensor, the Hydronic L3 has an automatic height adjustment up to the following heights above sea level (ASL):

- HL3-16: 3900 m ASL
- HL3-24: 4000 m ASL
- HL3-30: 3000 m ASL
- HL3-35: 2500 m* ASL

  *) 2000 m – 2500 m ASL: The intake temperature of the combustion air must be < 50 °C (if necessary intake of cool combustion air, e.g. via a hose shroud).
- Heating operation at altitudes above the specified altitudes:
  - The heater can be run for short periods (e.g. driving through a mountain pass or taking a break in your journey).
  - In case of a lengthy stay, e.g. winter camping, fault-free heating mode cannot be guaranteed.

## 4.6 Functional description

- Switching on the heater
  - When the heater is switched on, the  symbol appears in the control unit or the operating display lights up.
  - At the same time, a component test is carried out.
  - The water pump is then put into operation.

**NOTE**
- The nozzle preheating is switched on at the first start.
- The nozzle preheating remains switched on until the heater is switched to "OFF" or switched off beforehand.
- The power of the nozzle preheating is continuously controlled by the fuel temperature (10 W – 80 W ±10%).

### 4.6.1 Burner start

- The electric motor starts and drives the combustion air impeller and the fuel pump.
- After a short period of time (see "Functional diagram" on page 33), the ignition is turned on, and the fuel solenoid valve opens. Within these 10 seconds, a rotational check of the electric motor is carried out. The fuel and combustion air in the combustion chamber form an ignitable mixture.
- The mixture is ignited by a high-voltage ignition spark. The flame monitor recognises the flame's flicker frequency and

switches off the ignition spark generator. The hot fuel gases flow through the heat exchanger and transfer the heat to the heating medium.

**NOTE**

- The heater operates depending on the heat requirement, therefore the length of the burner's on-time and off-time periods differ.
- The water pump continues to run throughout the whole operating period, even during pause mode periods and during the after-run.

**Options**

- If temperature lowering is activated, the "ON/OFF" control temperatures are lowered by approx 8 K.
  Connection of the ON / OFF switch for temperature lowering, see circuit diagram on page 37.
- The water pump can be run independently of the heater if appropriate controls are installed. For connection of the additional "ON/OFF" switch for separate water pump control, see circuit diagram on page 37.
- With control of the vehicle's blower, the vehicle blower is switched on or off at the following water temperatures.
  - Water temperature > 45 °C —>Vehicle blower "ON"
  - Water temperature < 35 °C —>Vehicle blower "OFF"

Activation of the vehicle blower, see wiring diagram on page 37.

**Switching off the heater**

If the heater is switched off, the fuel solenoid valve closes and at the same time, after-running begins for approx. 3 minutes.
After the after-running has finished, the heater is switched off automatically.

**NOTE**

- For safe operation of the heater, the overrun must be guaranteed.
- Until it is switched off, including during the overrun, the fuel is circulated.

Functional diagram

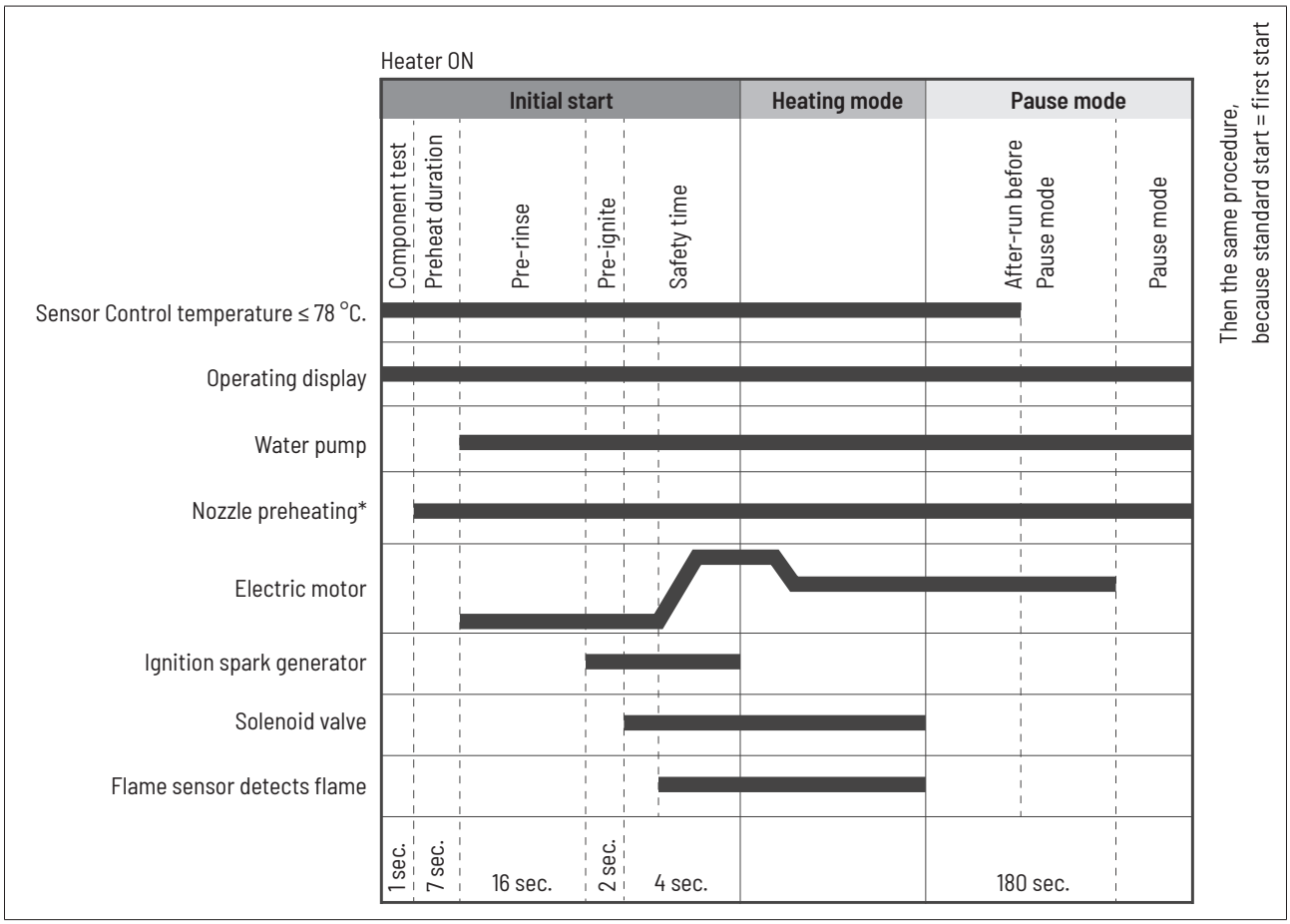


The power of the nozzle preheating is continuously controlled by the fuel temperature (10 W – 80 W ±10%) The activation of the nozzle preheating is permanent as long as the heating mode is active.

## 4.7 Control and safety devices

The heater is equipped with the following control and safety devices.

- If the heater does not ignite, the control unit is locked out after an inadmissible number of unsuccessful start attempts (see note below).

- If the flame goes off by itself during operation, the heater is restarted. If the heater does not ignite or ignites but goes out again within 10 minutes, a safety lock-out occurs. The safety shut-down can be cancelled by briefly switching off and on again (heater ON / OFF).
- In the event of overheating (e.g. lack of water, poorly ventilated coolant liquid circuit) the overheating sensor triggers. The fuel supply is interrupted and a safety shut-down occurs. Once the cause of the overheating has been eliminated, the heater can be restarted by switching it off and on again (heater ON / OFF). Prerequisite: The heater is sufficiently cooled (water temperature < 70 °C). After max. 10 overheating shutdowns, the control unit is locked (see note below).
- If the lower or upper voltage limit is reached, the heater is shut down automatically.
- The speed of the fan motor is monitored continuously. If the fan motor does not start up, if it is blocked or if the speed falls below 40 % of the set speed, a safety shutdown occurs after 60 sec.
- If the water flow is too low, the water discharge temperature is limited by premature compensation. The temperature rise of the heating medium is monitored over time. If it rises too fast (water flow too low), the heater automatically switches "OFF" and begins with the after-running, the cycle then begins again.
- A constant comparison of measured values between the temperature sensor and the overheating sensor results in additional safety for the heater, since a premature fault shutdown occurs if the difference between the measured values is too large (water flow too low).
- If the flame sensor detects a flame during the heater's after-run a lockout occurs (shutdown on faults).
- After an impermissible number of shut-downs on fault, the control box is locked.

**NOTE**

- The repair instructions for this heater detail the various causes of malfunction shutdowns and possible remedies.
- The control unit can be unlocked with a diagnostic device or an operating element. For the procedure and description for diagnostic units and control units, see "Installation Instructions Plus – EasyStart / Altitude Kit / Special Functions and Diagnosis".
- For operating details and error list, see “Troubleshooting and repair instructions” of the heater or the "Installation instructions PLUS – EasyStart, special functions and diagnosis”.

### 4.8 Emergency stop – EMERGENCY OFF

If an emergency stop – EMERGENCY OFF – is necessary during operation, proceed as follows:

- Switch the heater off at the control unit or
- remove the fuse or
- disconnect the heater from the battery.

# 5 Electrics

## 5.1 Heater wiring

**DANGER!**

**DANGER HIGH VOLTAGE**

Before opening the heater, disconnect the plug-in connector with the vehicle.

**WARNING!**

**SAFETY INSTRUCTIONS!**

Connect the heater electrically according to the EMC directives. EMC can be affected in case of interventions not carried out properly. For this reason, comply with the following instructions:

→ Ensure that the insulation of electrical cables is not damaged.
Avoid: chafing, kinking, jamming or exposure to heat.

→ In waterproof connectors, seal any connector chambers not in use with filler plugs to ensure they are dirt-proof and water-proof.

→ Electrical connections and ground connections must be free of corrosion and firmly connected.

→ Lubricate connections and ground connections outside the heater interior with contact grease.

**NOTE**

Comply with the following when wiring the heater and the control unit:

- The negative and positive poles of the heater's controls are to be directly connected to the vehicle's battery.
- Ask the heater manufacturer about plugs deviating from the standard version.
- Electrical leads, switch and control boxes must be positioned in the vehicle so that they can function perfectly under normal operating conditions without impairment (e.g. due to heat exposure, moisture, etc.).
- The following cable cross-sections are to be used between the battery and heater. This ensures that the max. allowable voltage drop in the cables does not exceed 1 V for 24 V rated voltage. Cable cross-sections for a cable length (plus cable + minus cable) of:
  - up to 8 m = cable cross-section 2.5 $mm^2$
  - up to 8 m = cable cross-section 4 $mm^2$
- If the plus cable is to be connected to the fuse box (e.g. terminal 30), the vehicle's own cable from the battery to the fuse box must also be included in the calculation of the total cable length and, if necessary, redimensioned.
- Insulate unused cable ends.
- It must be ensured that if the battery isolating switch is pressed due to EMERGENCY OFF, all the heater's electric circuits are disconnected from the battery immediately (without any consideration of the heater's status).

- If the battery isolating switch is pressed to disconnect the battery from all electric circuits, the heater must be switched off first and if applicable you must wait until the heater's afterrun has finished.

## 5.2 Parts list for circuit diagram, heater and cable harness

| | |
|---|---|
| a | Cable harness heater |
| -A10 | Control box |
| -A20 | Ignition spark generator |
| -A30 | Fuse holder 3-pin |
| -B6 | Inlet / outlet sensor |
| c1 | CAN control wire harness |
| c2 | Wire harness TP7.0 control element |
| f | Switch cable S+ |
| -F1 | Fuse, heater |
| -F2 | Fuse, control unit |
| -F4 | Fuse, water pump |
| -K1 | Fan relay |
| -M4 | Burner motor |
| -M10 | Water pump |
| -P1 | Switch-on control |
| -P3 | Fault indicator lamp |
| -P6 | Fuel indicator lamp |
| -R1 | Terminating resistor 120 Ω |
| -R2 | Terminating resistor 9.2 kΩ |
| -R3 | CAN terminating resistor in the control unit 120 Ω |
| -R5 | Fuel pre-heating |
| -S4 | Switch, temperature decrease |
| -S5 | Switch, water pump |
| w | Water pump, external control |
| -XB100 | Socket housing Power supply Heater |
| -XB101 | Bush housing, water pump |
| -XB102 | Socket housing CAN/diagnostic connection |
| -XB103 | Socket housing Combination sensor |
| -XB104 | Socket housing Fuel pump Heater |
| -XB105 | Socket housing Ignition spark generator |
| -XB106 | Socket housing Fuel solenoid valve 1 |
| -XB107 | Socket housing Fuel solenoid valve 2 |
| -XB108 | Bush housing, Burner motor |
| -XB6/1 | Socket housing EasyScan |
| -XB6/2 | Socket housing, TP7.1 |
| -XB7 | Socket housing Blower relay |
| -XS100 | Plug housing Power supply heater |
| -XS101 | Connector housing, water pump |
| -XS102 | Connector housing CAN and diagnostic connection |
| -XS103 | Connector housing Combination sensor |
| -XS104 | Connector housing Fuel pump Heater |
| -XS105 | Connector housing Ignition spark generator |
| -XS106 | Connector housing Fuel solenoid valve 1 |
| -XS107 | Connector housing Fuel solenoid valve 2 |
| -XS108 | Connector housing, burner motor |
| -XS6/1 | Connector housing with terminating resistor |
| -Y3/1 | Fuel solenoid valve 1 |
| -Y3/2 | Fuel solenoid valve 2 |
| -Z1 | Ignition electrodes |

**NOTE**

A CAN terminating resistor is not permitted in the wiring harness on the heater side, as the control unit of the Hydronic L3 already contains a CAN terminating resistor (-R3).

## 5.3 Heater circuit diagrams

### 5.3.1 Heater

X:15 Ign (+)
X:58 Light (+)
X:30 Bat (+)
X:31 Bat (-)

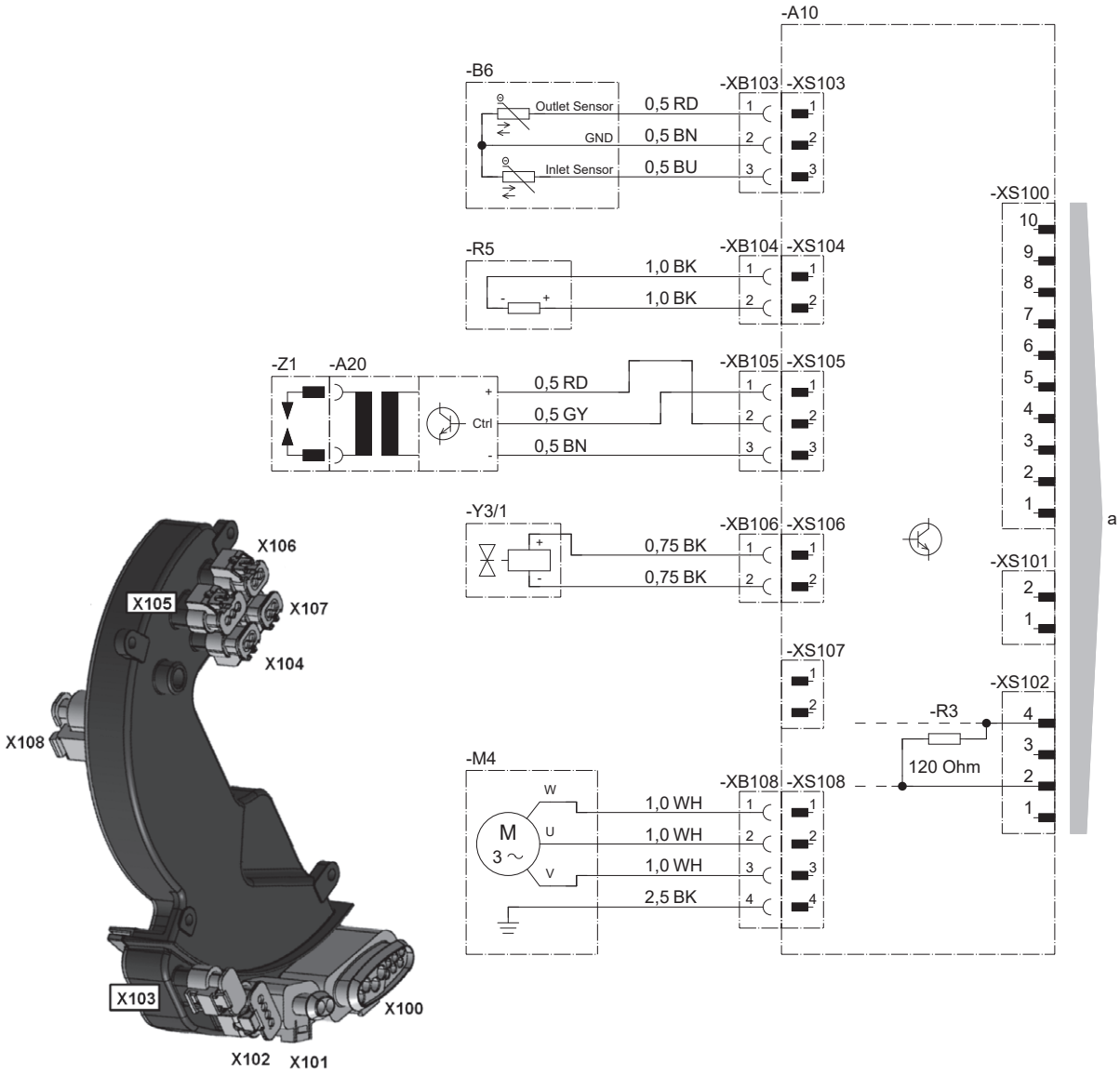


25.3040.00.9601

-a to heater
-X102 CAN and diagnostic connection

### 5.3.2 Cable harness

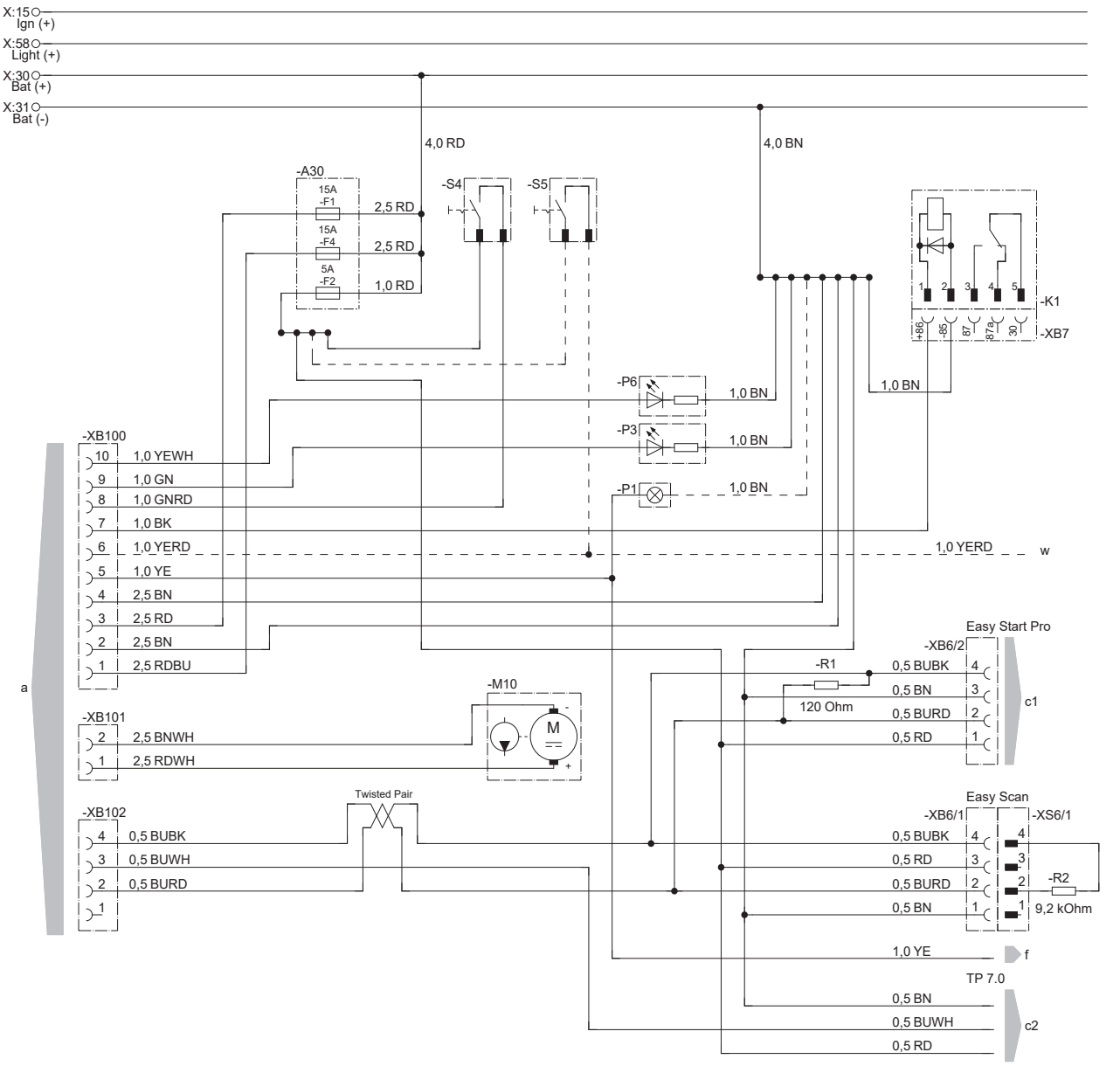


25.3040.00.9602

-a to heater
-c1 CAN control element
-c2 TP7.0 control element
-f Cable YE for switch S+
-XS6/1 Connection diagnostics

Connectors and bush housings are shown from the cable inlet side.

**Cable colours**

| | | | | | |
|---|---|---|---|---|---|
| rd | red | gr | grey | bk | black |
| bu | blue | ye | yellow | gn | green |
| wh | white | vt | violet | bn | brown |
| og | orange | tq | turquoise | | |

## 5.4 Circuit diagrams for control units

### 5.4.1 EasyStart Timer with connection via S+

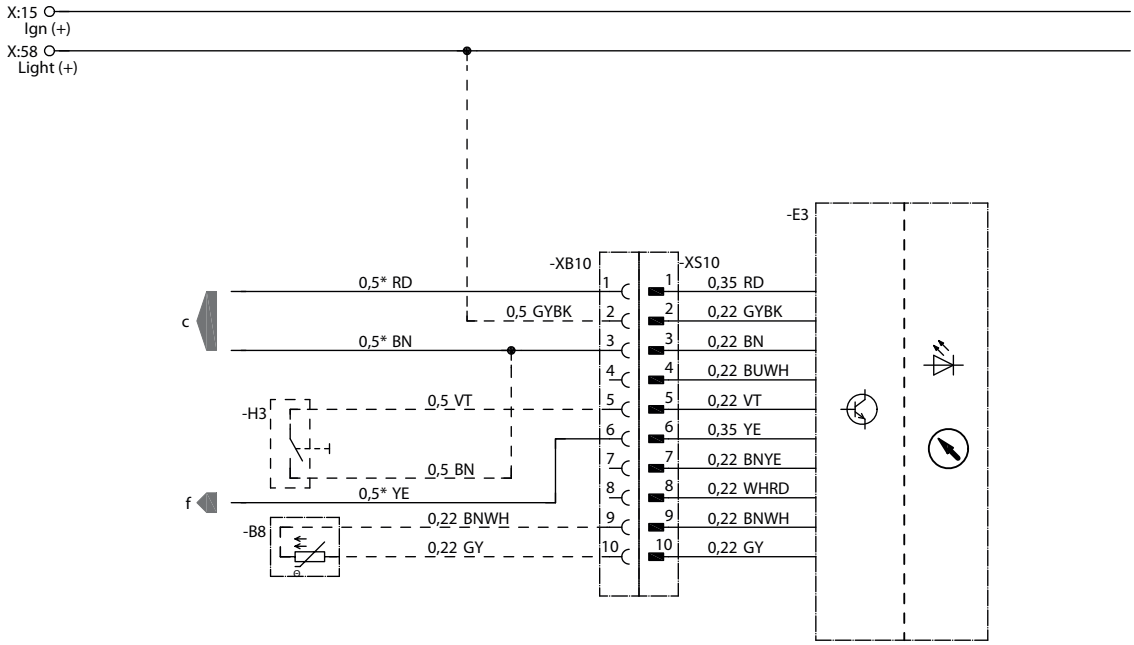


22.1000.34.9703

-B8 in-car temperature sensor
-E3 EasyStart Timer
-H3 EasyStart Timer button
-c to heater
-F Switch-on signal S+

**Cable colours**

| | | | | | |
|---|---|---|---|---|---|
| rd | red | GR | grey | bk | black |
| bu | blue | ye | yellow | gn | green |
| wh | white | vt | violet | bn | brown |
| OR | orange | | | | |

Connectors and bush housings are shown from the cable inlet side.

**NOTE**

- Further circuit diagrams for the EasyStart timer are printed in the Installation Instructions Plus, these are available to view and download from the Service Portal.
- Switching on and off via S+ must be activated in the workshop menu of the control element. See the PLUS installation instructions.
- Diagnostics are not possible when connecting via S+.

### 5.4.2 EasyStart Timer with connection via LIN

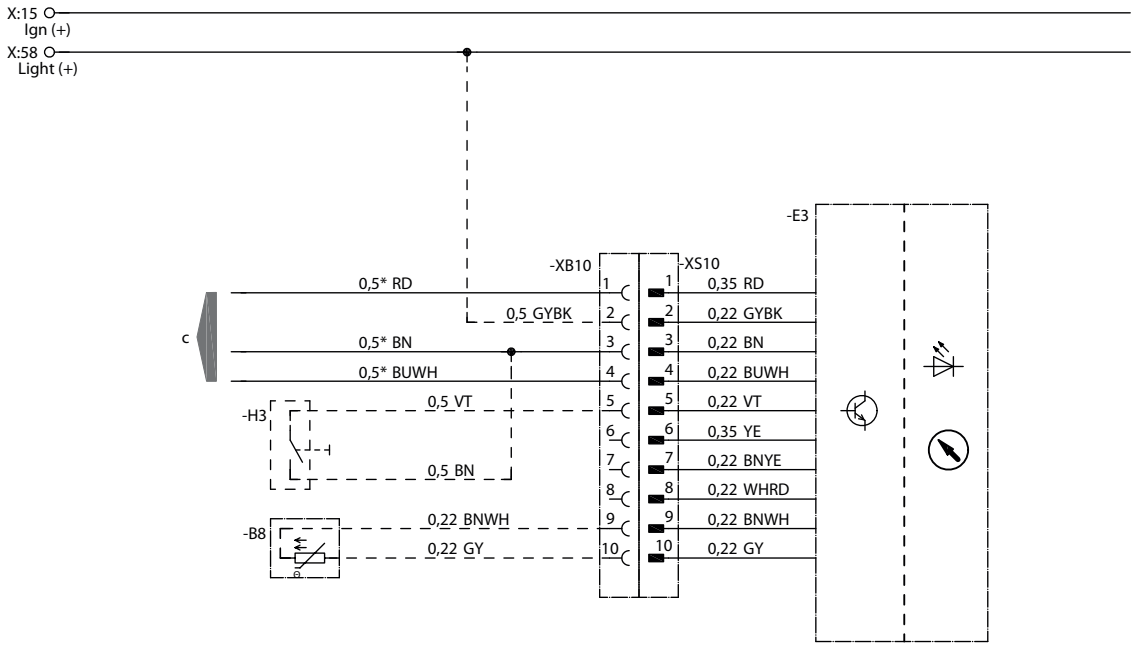


22.1000.34.9703

-B8 in-car temperature sensor
-E3 EasyStart Timer
-H3 EasyStart Timer button
-c to heater
-F Switch-on signal S+

Connectors and bush housings are shown from the cable inlet side.

**NOTE**

- Further circuit diagrams for the EasyStart timer are printed in the Installation Instructions Plus, these are available to view and download from the Service Portal.

**Cable colors**

| | | | | | |
|---|---|---|---|---|---|
| rd | red | GR | grey | bk | black |
| bu | blue | ye | yellow | gn | green |
| wh | white | vt | violet | bn | brown |
| OR | orange | | | | |

### 5.4.3 EasyStart Remote+ with connection via S+

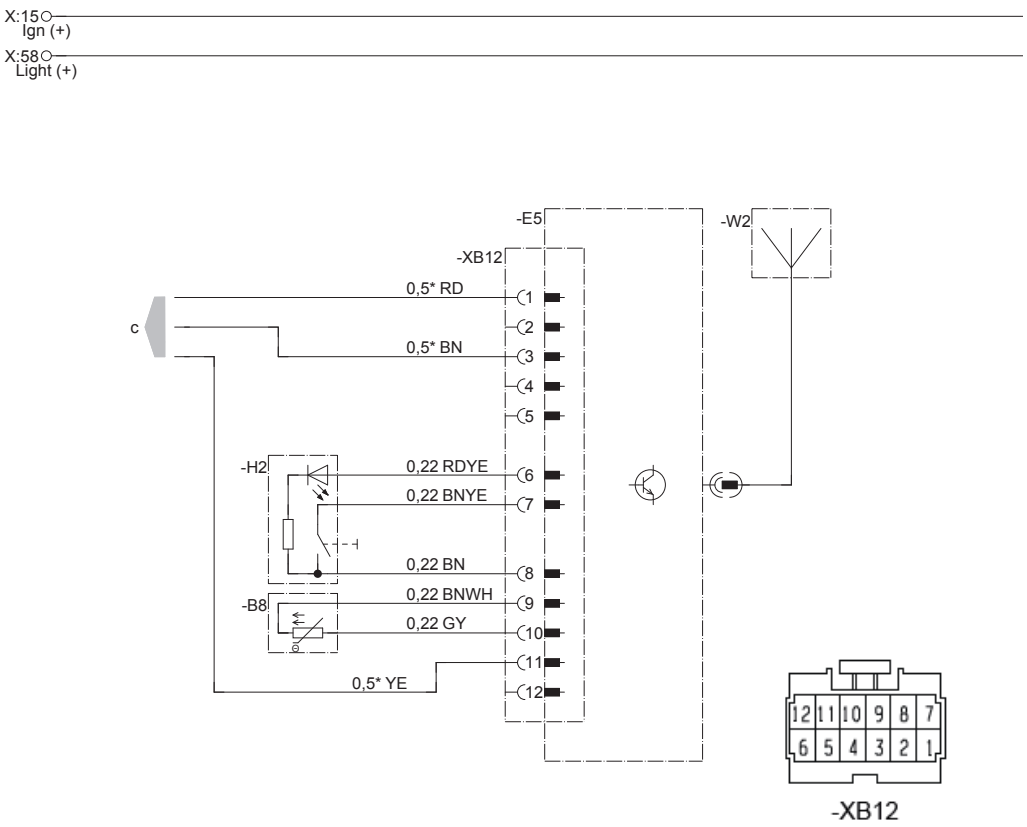


22.1000.35.9702

-B8 Sensor Room temperature
-E5 EasyStart Remote+ remote control
-H2 Button
-W2 Antenna
-c to heater

Connectors and bush housings are shown from the cable inlet side.

**Cable colours**

| | | | | | |
|---|---|---|---|---|---|
| rd | red | GR | grey | bk | black |
| bu | blue | ye | yellow | gn | green |
| wh | white | vt | violet | bn | brown |
| OR | orange | | | | |

**NOTE**

- Further circuit diagrams for EasyStart Remote+ are printed in the Installation Instructions Plus, these are available to view and download from the Service Portal.
- Switching on and off via S+ must be activated in the workshop menu of the control element. See the PLUS installation instructions.
- Diagnostics are not possible when connecting via S+.

### 5.4.4 EasyStart Remote+ with connection via LIN

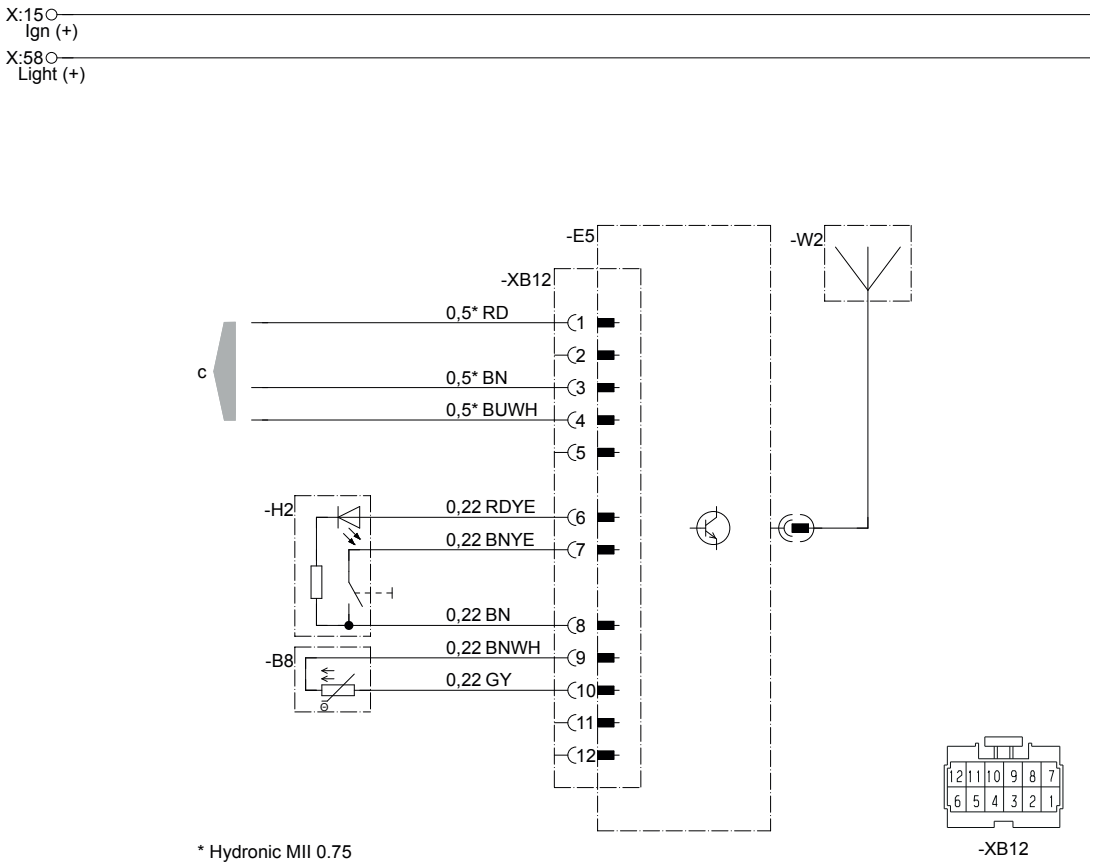


22.1000.34.9722

-B8 Sensor Room temperature
-E5 EasyStart Remote+ remote control
-H2 Button
-W2 Antenna
-c to heater

Connectors and bush housings are shown from the cable inlet side.

**NOTE**

- Further circuit diagrams for EasyStart Remote+ are printed in the Installation Instructions Plus, these are available to view and download from the Service Portal.

**Cable colours**

| | | | | | |
|---|---|---|---|---|---|
| rd | red | GR | grey | bk | black |
| bu | blue | ye | yellow | gn | green |
| wh | white | vt | violet | bn | brown |
| OR | orange | | | | |

### 5.4.5 EasyStart Remote with connection via S+

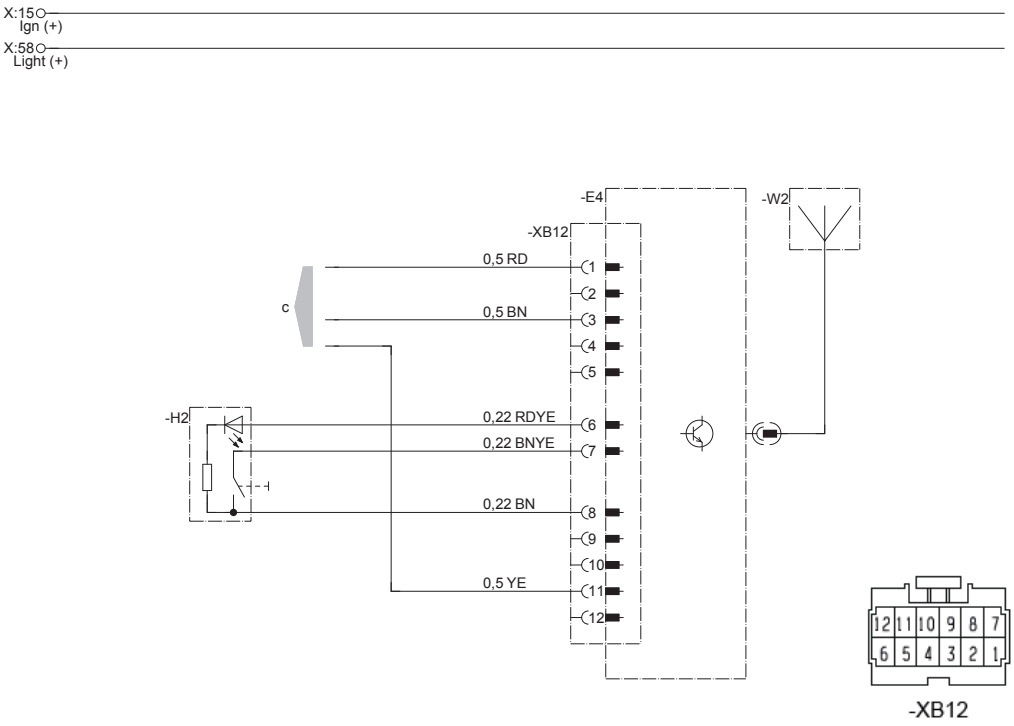


22.1000.35.9701

| | |
|---|---|
| -E4 | EasyStart Remote remote control |
| -H2 | Button |
| -W2 | EasyStart Remote antenna |
| -c | to heater |

Connectors and bush housings are shown from the cable inlet side.

**Cable colours**

| | | | | | |
|---|---|---|---|---|---|
| rd | red | GR | grey | bk | black |
| bu | blue | ye | yellow | gn | green |
| wh | white | vt | violet | bn | brown |
| OR | orange | | | | |

**NOTE**

- Further circuit diagrams for EasyStart Remote are printed in the Installation Instructions Plus, these are available to view and download from the Service Portal.
- Switching on and off via S+ must be activated in the workshop menu of the control element. See the PLUS installation instructions.
- Diagnostics are not possible when connecting via S+.

### 5.4.6 EasyStart Remote with connection via LIN

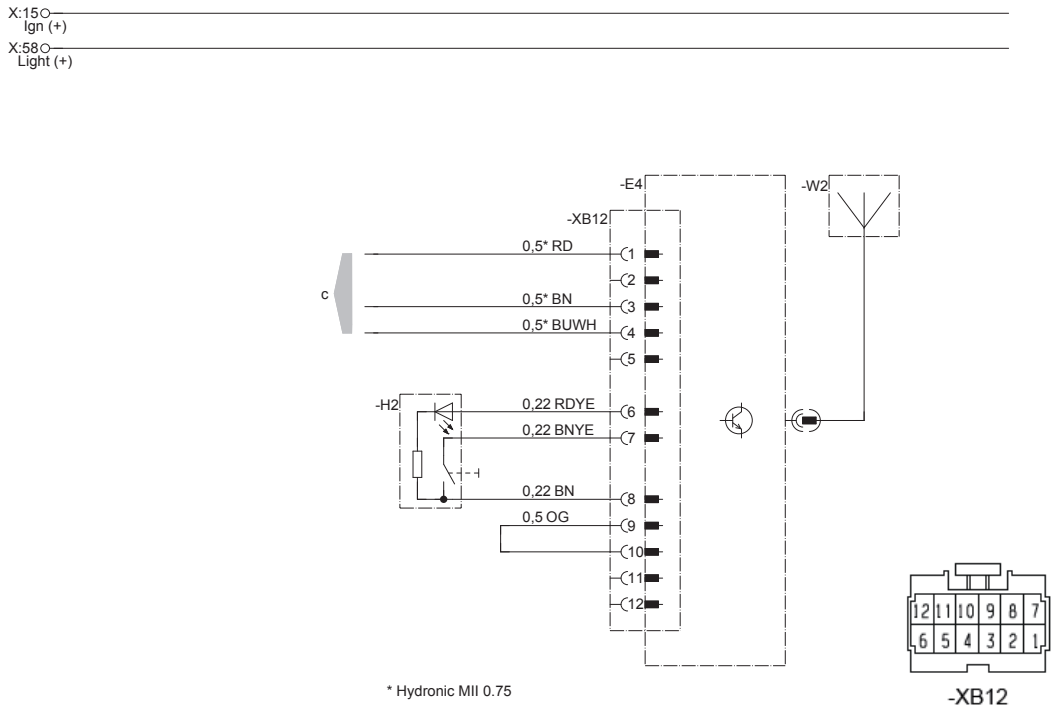


22.1000.35.9701

-E4 EasyStart Remote remote control
-H2 Button
-W2 EasyStart Remote antenna
-c to heater

Connectors and bush housings are shown from the cable inlet side.

**Cable colours**

| | | | | | |
|---|---|---|---|---|---|
| rd | red | GR | grey | bk | black |
| bu | blue | ye | yellow | gn | green |
| wh | white | vt | violet | bn | brown |
| OR | orange | | | | |

**NOTE**

- Further circuit diagrams for EasyStart Remote are printed in the Installation Instructions Plus, these are available to view and download from the Service Portal.

### 5.4.7 EasyStart Web with connection via S+

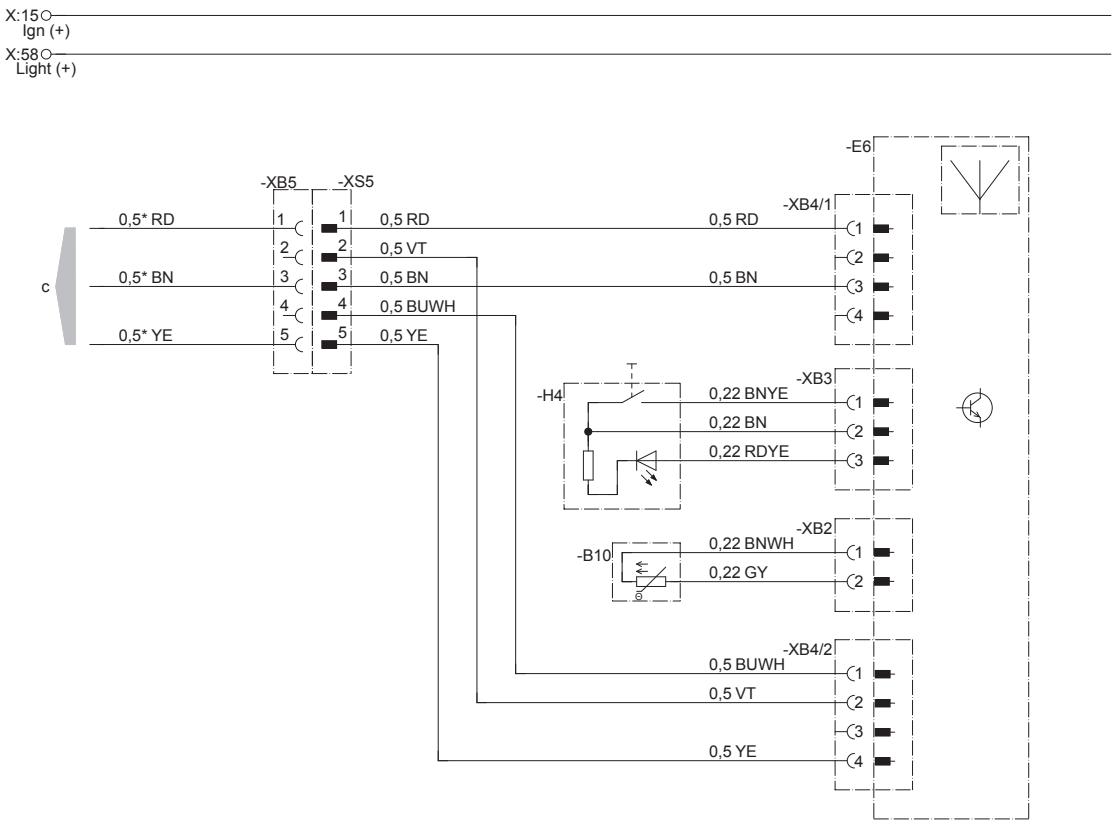


22.1000.34.9783

-c to heater
-H4 EasyStart Web button
-B10 In-car temperature sensor
-E6 EasyStart Web

**Cable colours**

| | | | | | |
|---|---|---|---|---|---|
| rd | red | GR | grey | bk | black |
| bu | blue | ye | yellow | gn | green |
| wh | white | vt | violet | bn | brown |
| OR | orange | | | | |

Connectors and bush housings are shown from the cable inlet side.

**NOTE**

- Further circuit diagrams for the Easy Start Web are printed in the Installation Instructions Plus; these are available to view and download from the Service Portal.
- Switching on and off via S+ must be activated in the workshop menu of the control element. See the PLUS installation instructions.
- Diagnostics are not possible when connecting via S+.

### 5.4.8 EasyStart Web with connection via CAN

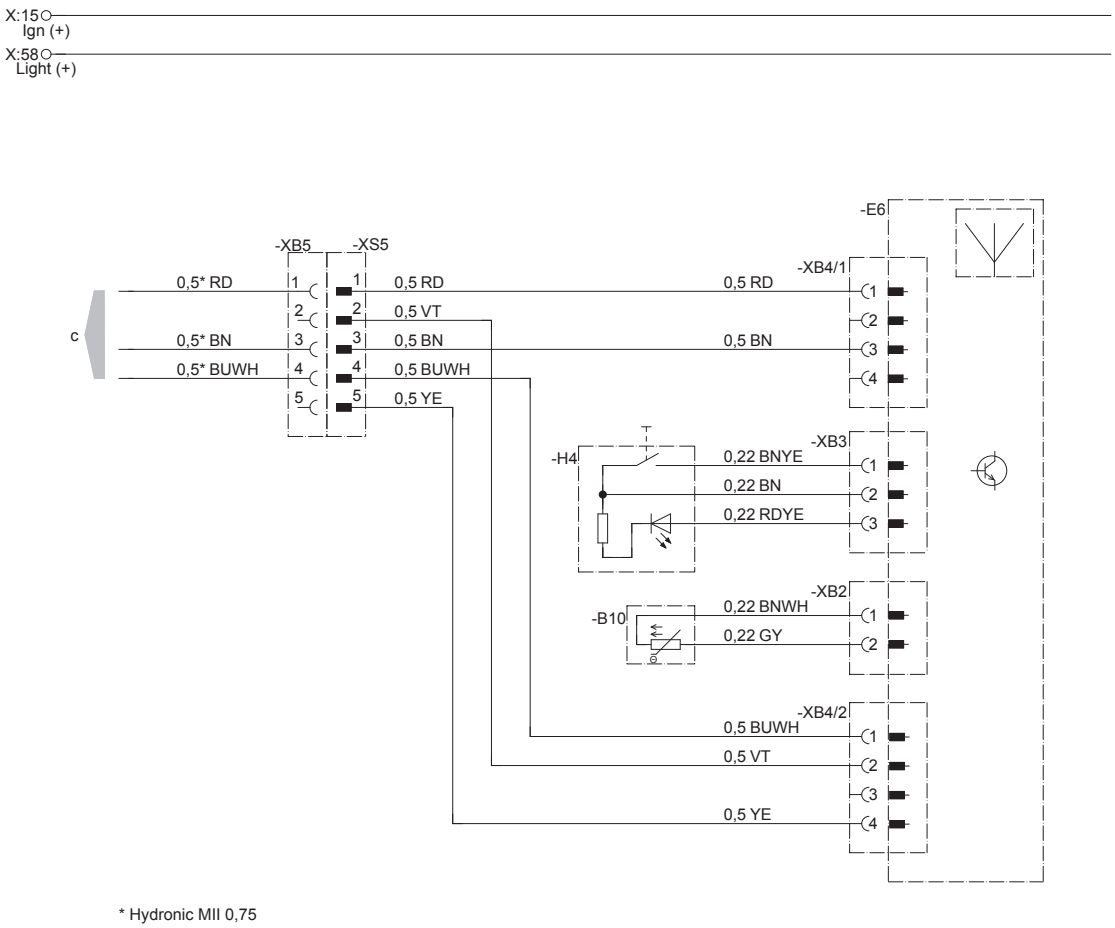


* Hydronic MII 0,75

22.1000.34.9783

-c to heater
-H4 EasyStart Web button
-B10 In-car temperature sensor
-E6 EasyStart Web

Connectors and bush housings are shown from the cable inlet side.

**NOTE**

- Further circuit diagrams for the Easy Start Web are printed in the Installation Instructions Plus; these are available to view and download from the Service Portal.

### 5.4.9 EasyStart Pro with connection via CAN

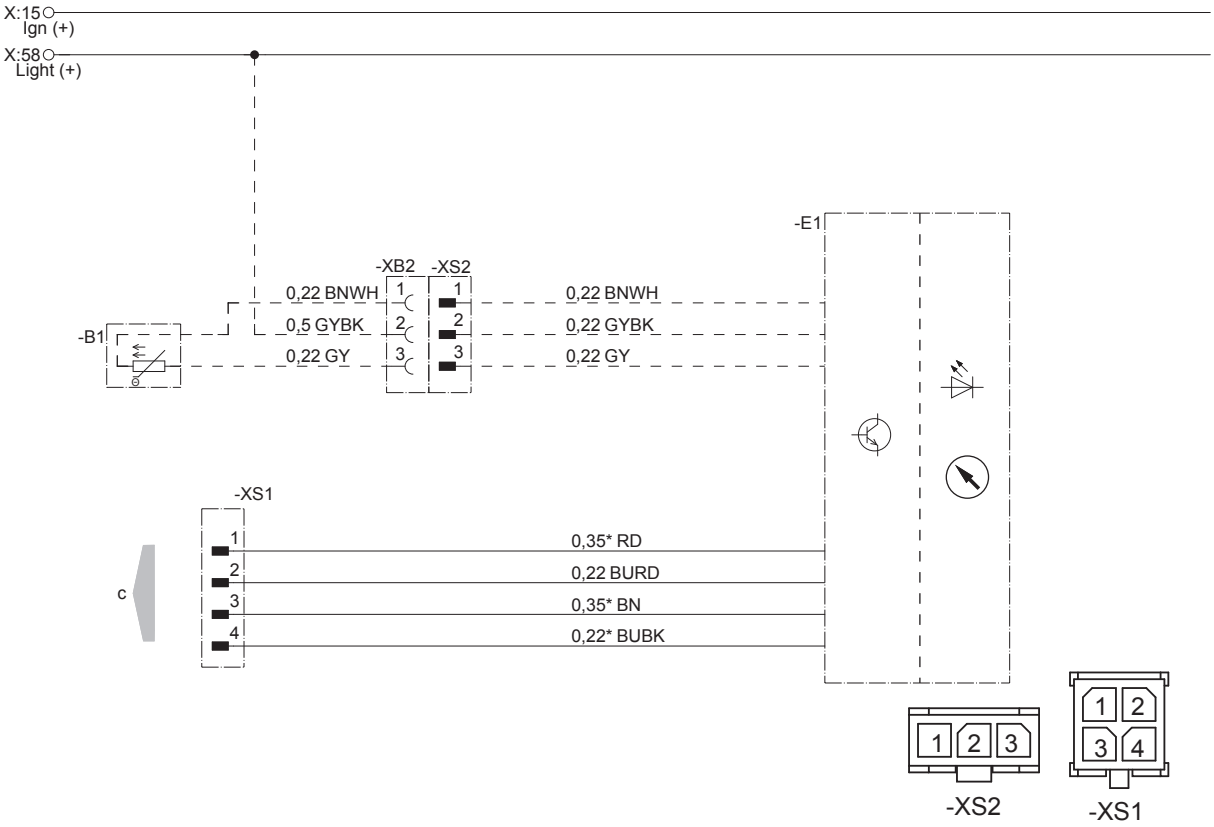


22.1000.34.9722

-B1 Sensor Room temperature
-E1 EasyStart Pro
c To heater cable harness

Connectors and bush housings are shown from the cable inlet side.

**NOTE**
Further circuit diagrams for the Easy Start Pro are printed in the Installation Instructions Plus; these are available to view and download from the Service Portal.

# 6 Troubleshooting / Maintenance / Service

### 6.1 If any faults occur, check the following points

- If the heater does not start after being switched on:
  - Switch the heater off and on again.
- If the heater still does not start, check whether:
  - Check the fuses.
  - The electrical cables, connections, terminals, are ok?
  - Is the combustion air system or exhaust system blocked?
  - Fuel supply OK?
  - Fuel in the tank?

### 6.2 Troubleshooting

If, after checking these items, the heater is still faulty or another malfunction occurs in your heater, please contact:

- If factory-installed, your contract workshop.
- If subsequently installed, the workshop / garage which installed the heater.

**NOTE**

Please note that guarantee claims can expire if the heater is modified by a third party or if non-original parts are installed.

### 6.3 Maintenance instructions

- Switch the heater on once a month for about 10 minutes, even outside the heating period.
- Before the heating period starts, the heater should be put through a trial run. If thick, persistent smoke develops, unusual burning noises or a clear fuel smell occurs or if electric / electronic components overheat, the heater must be switched off and put out of service by removing the fuse.
  In this case, the heater should not be started up again until it has been checked by qualified staff who have been trained on Eberspächer heaters.
- Check the openings of the combustion air system and exhaust system after longer standstills, clean if necessary!

**NOTE**

Follow the maintenance schedule on page 49 to 51.

### 6.4 Initial startup

The following points are to be checked by the company installing the heater during initial commissioning.

- After installation of the heater, the coolant circuit and the whole fuel supply system must be vented carefully. Comply with the instructions issued by the vehicle manufacturer.
- Open the coolant liquid circuit before the trial run (set the temperature control to "WARM").
- During the heater trial run, all water and fuel connections must be checked for leaks and secure, tight fit.
- If faults occur while the heater is running, use a diagnostic unit to determine and correct the cause of the fault.

### 6.5 Changing components

The components listed below must be exchanged at the end of the given operating period:

- Heat exchanger after 5,000 operating hours,
- Burner after 5,000 operating hours,
- Nozzle after 600 operating hours or at least once per year.

### 6.6 Service

**Technical Support**

If you have any technical questions or problems with the heater, the control unit or the operating software, please contact the following service address for Undited Kingdom:
support-UK@eberspaecher.com

In USA please contact:
support-US@eberspaecher.com

# 7 Environment

### 7.1 Certification

The high quality of Eberspächer products is the key to our success. To guarantee this quality, we have organised all work processes in the company along the lines of quality management (QM). Even so, we still pursue a large number of activities for continuous improvement of product quality in order to keep pace with the similarly constantly growing requirements made by our customers.
All the steps necessary for quality assurance are stipulated in international standards. This quality is to be considered in a total sense. It affects products, procedures and customer-supplier relationships.
Officially approved public experts assess the system and the corresponding certification company awards a certificate.
Eberspächer Climate Control Systems International GmbH has already qualified for the following standards:

**Quality management in accordance with ISO TS 9001:2015 and IATF 16949:2016**

**Environmental management system in accordance with ISO 14001:2015**

## 7.2 Disposal

**Disposal of materials and reuse of recoverable materials**
End-of-life devices and their components, defective components and packaging material can all be separated into their constituent materials so that all parts can be disposed of as in an environment-friendly manner or recycled where applicable. Environmentally-friendly disposal includes the possible separation of materials so that recoverable materials can be reused. Ensure that end-of-life devices and their components are disposed of properly and are recycled.

**NOTE**
Waste products such as used fuel-carrying components and similar wearing parts can harm the environment as well as people and animals and should therefore be disposed of properly. Contact your local recycling company or your specialist dealer to find out how waste products are to be disposed of properly.

**Dismantling the heater**
The heater is dismantled according to the repair stages in the current troubleshooting / repair instructions.

**NOTE**
Hydronic L3 repair instructions: Mat.-No. 25.3042.95.2682
In the Eberspächer partner portal
https://partner.eberspaecher.com/de
The repair manual can be viewed and downloaded.

**Disposal of materials**
End-of-life devices, defect components and packaging material can all be separated and sorted into pure-grade factions so that all parts can be disposed of as required in an environment-friendly manner recycled where applicable. Electric motors, control boxes and sensors (e.g. temperature sensors) are deemed to be "electronic scrap".

**Dismantling the heater**
The heater is dismantled according to the repair stages in the current troubleshooting / repair instructions.

**Packaging**
The packaging of the heater can be kept in case the heater has to be sent back.

## 7.3 EU Declaration of Conformity

We herewith declare that the version of the heater placed on the market by us conforms to the applicable provisions of the following EU Directive.

EU Directive 2014/30/EU

CE

The full Declaration of Conformity can be viewed and downloaded from the download centre at www.eberspaecher.com.

## 7.4 UKCA Declaration of Conformity

We herewith declare that the version of the heater placed on the market by us conforms to the applicable provisions of the following UK Directives.

Electromagnetic Compatibility, Statutory Instrument 2016, No. 1091

UKCA

The full Declaration of Conformity can be viewed and downloaded from the download centre at www.eberspaecher.com.

# 8 Maintenance schedule

Maintenance schedule and measurement protocol for Eberspächer Hydronic L3 heaters

- The heater must be tested at least once a year, ideally before the start of the heating period, in accordance with the following table.
- Refer to the appropriate troubleshooting and repair instructions to carry out the work.
- This maintenance schedule ensures that the maintenance has been carried out properly.

| **Testing / maintenance work (once a year)** | **Test results** OK | not OK | Measured values, Repairs made | Important Information |
|---|---|---|---|---|
| **1. Electrical connections** | | | | |
| • Disconnect the electrical connections to the heater harness, check for oxidation. Spray the plug connections and reconnect after performing point 5. | ☐ | ☐ | | Use suitable contact spray. |
| • Check electrical fuses for oxidation or contact resistance. | ☐ | ☐ | | |
| **2. Heat exchanger** | | | | Renew the heat exchanger after 5,000 h. |
| • Check for traces of leakage. | ☐ | ☐ | | |
| • If necessary, clean the outside and inside of the heater (remove soot and deposits). | ☐ | ☐ | | |
| **3. Fuel system** | | | | |
| • Check fuel lines and connections for leaks. | ☐ | ☐ | | Ensure that the fuel supply and return lines are tightly connected! Tighten screw connections and hose clamps. |
| • Replace fuel filter element with gasket. | ☐ | ☐ | | |
| • If equipped, open the fuel shut-off valves. | ☐ | ☐ | | |
| • Check running time of the fuel pump. | ☐ | ☐ | | Renew fuel pump after 3000 h or after 5 years. |
| **4. Burner head** | | | | Renew burner head after 5000 h. |
| • Check combustion air intake opening for free passage. | ☐ | ☐ | | |
| • Remove burner head | ☐ | ☐ | | Replace bent or dirty electrodes. |
| – Check inside of housing for fuel accumulations due to leaks.<br>– Clean inspection window of the flame detector.<br>– Check ignition electrodes. | | | | |
| – Change atomizer nozzle. | | | | Change atomizer nozzle after 600 hours Renew, ideally before the start of the heating period. |

| Testing / maintenance work (once a year) | Test results OK | Test results not OK | Measured values, Repairs made | Important Information |
|---|---|---|---|---|
| **5. Exhaust system** | | | | |
| • Check exhaust pipe for free passage, clean if necessary. | ☐ | ☐ | | |
| • Remove flame tube from heat exchanger, inspect both parts for damage and contamination, clean or replace if necessary. | ☐ | ☐ | | |
| • Insert flame tube and install burner head. Make sure that the connection to the heat exchanger is secure. | ☐ | ☐ | | |
| • Reconnect electrical connectors. | ☐ | ☐ | | |
| • Measurements Setpoints and procedure are listed in the troubleshooting and repair instructions. | ☐ | ☐ | | Recommended meter: MSI 150 Euro flue gas analyzer 5600593 |
| – Ambient temperature (°C) | | | _____°C | |
| – Exhaust gas temperature (°C) | | | _____ °C. | Operating display according to Directive 2001/56/EC |
| – CO (ppm) Limit value < 1000 | ☐ | ☐ | _____ ppm | |
| Bacharach soot number Limit value < 4 | ☐ | ☐ | _____ | |
| – Fuel pump pressure (bar) | ☐ | ☐ | _____ | |
| **6. Coolant system** | | | | |
| • If equipped, clean water filter element. | ☐ | ☐ | | |
| • If equipped, open fuel shut-off valves. | ☐ | ☐ | | |
| **7. Functional control** | | | | |
| • If equipped, open fuel shut-off valve in the return line. | ☐ | ☐ | | |
| • Check the function of the heater after at least 10 minutes of heating operation. | ☐ | ☐ | | |
| • Watch out for smoke development in the after-run; replace nozzle if necessary. | ☐ | ☐ | | |

**NOTE**
When the work is complete, complete the data sheet on the following page.

**Data sheet**

Data of the operator

| | |
|---|---|
| Address | Day of measurement |
| | Installed in vehicle (type, version, year of construction) |

**Heater data**

| | |
|---|---|
| Heater type / serial number | Year of commissioning |
| Nominal power in kW | Fuel<br>☐ Diesel ☐ Heating oil EL<br>☐ HVO |

**Summary**

☐ The result meets the requirements

☐ The result does not meet the requirements (further action is required).

**The review or adjustment has been performed by:**

| | |
|---|---|
| Name: _____<br>Date: _____<br>Location: _____<br>Dept.: | _____<br>_____<br>Signature |

**Eberspächer Climate Control Systems International GmbH**
**Eberspächerstraße 24**
**73730 Esslingen**
**Germany**
**info@eberspaecher.com**
**www.eberspaecher.com**

25.3040.90.0001.0A EN 03.2026 Subject to change © Eberspächer Climate Control Systems International GmbH