Eberspächer



EN / VEHICLE HEATERS / TECHNICAL DOCUMENTATION

INSTALLATION INSTRUCTIONS
HYDRONIC AQUASYSTEM NA

The installation instructions are valid for the following heating systems:

Diesel installation kit	Order No.
Hydronic AquaSystem NA, HS3 D5E 12V	25.2800.10.0001

Gasoline installation kit	Order No.
Hydronic AquaSystem NA, HS3 B5E 12V	25.2800.10.0002

SEGMENT OVERVIEW



CONSTRUCTION



AGRICULTURE/
FORESTRY



RV



UTILITY/CARGO



CAR/LCV



AMBULANCE



PUBLIC SAFETY



MARINE



PERSONAL
TRANSPORT



TRUCK/HCV



ELECTRICAL
MINI VEHICLES

Chapter Chapter title
Chapter contents

1 INTRODUCTION

1.1 Concept of this document 7
1.2 General information 7
1.3 Reference documents 7
1.4 Special text formats and presentations 7
1.4.1 Lists 7
1.4.2 Cross references 7
1.5 Picture symbols 7
1.6 Intended use 8
1.6.1 Range of application of the system 8
1.6.2 Intended use of the heating system 8
1.7 Non-intended use 8
1.8 Disclaimer 8
1.9 Target groups of this document 8
1.10 Duty to instruct of the target groups 8
1.11 Hazard information and warnings for installation 9
1.12 Hazard information and safety instructions for operation 9
1.13 Accident prevention 10
1.14 Product listing 10

2 PRODUCT INFORMATION

2.1 Order No. and scope of supply 10
2.1.1 Installation kit part numbers 10
2.1.2 Hydronic heaters included in kits 10
2.1.3 Hydronic S3 scope of supply 10
2.1.4 Installation kit scope of supply 11
2.1.5 Connections 11
2.1.6 Overview – system, Hydronic S3 heater, and installation kit 12
2.1.7 Installation tools and materials not included in scope of supply 13
2.2 Technical data 13
2.2.1 Hydronic S3 13
2.2.2 Coolant pump 14
2.2.3 Silencio 2 14
2.2.4 Touchscreen 14
2.2.5 Controller – input / output 14
2.2.6 High altitude module 14
2.3 Main component dimensions 15
2.3.1 Hydronic S3 coolant heater 15
2.3.2 Coolant pump 15
2.3.3 Water heat exchanger 16
2.3.4 Air heat exchanger 16
2.3.5 Coolant reservoir 16
2.3.6 Touchscreen 17
2.3.7 Controller – input / output 17
2.3.8 High altitude module 17
2.3.9 Thermostatic mixing valve 18

3 MECHANICAL INSTALLATION

3.1 General installation requirements 18
3.2 Hydronyc S3 coolant heater 18
3.2.1 Installation location 18
3.2.2 Coolant pump 19
3.2.3 Nameplate 19

Chapter Chapter title

Chapter contents

	3.2.4	Combustion exhaust system	19
	3.2.5	Combustion intake system	20
	3.2.6	Fuel supply	21
	3.2.7	Fuel types	23
3.3	Coolant reservoir		24
3.4	Air heat exchanger		24
3.5	Water heat exchanger		25
3.6	Thermostatic mixing valve		25
3.7	Domestic water plumbing		25
3.8	Coolant circuit		26
	3.8.1	Simple circuit	26
	3.8.2	Other circuits	26
	3.8.3	Coolant mixture requirements	27
	3.8.4	Filling the system with coolant	27
3.9	Touchscreen		27
3.10	Input/output controller		27
3.11	Room temperature sensor		28
3.12	High altitude module		28

4 ELECTRICAL INSTALLATION

4.1	Wiring instruction		28
	4.1.1	Hydronic S3 wiring	28
	4.1.2	Touchscreen, I/O controller, High altitude module, and Room temperature sensor	29
	4.1.3	Air heat exchangers (Silencio 2)	29
	4.1.4	Coolant pump	29
	4.1.5	Electric heating (120 VAC)	30
4.2	Circuit diagrams		31
	4.2.1	Main harness connections	31
	4.2.2	Air heat exchangers and diode assy	33
	4.2.3	Electrical heating (120 VAC)	33

5 FUNCTION / CONFIGURATION / OPERATION

5.1	Description of the heating system		34
5.2	Heating with diesel or gasoline		34
5.3	Heating with electricity		34
5.4	Hydronic S3 configuration for Hydronic AquaSystem		35
	5.4.1	Connecting EasyScan	35
	5.5.2	Max runtime and coolant pump settings	35
5.5	Initial commissioning of the system		36
	5.5.1	Filling up with coolant and purging air	36
	5.5.2	Priming fuel lines	37
	5.5.3	Preparing for water heating	37
	5.5.4	Functional component checks	37
5.6	User interface basic operation		38
	5.6.1	Main screen	38
	5.6.2	Menu navigation	38
	5.6.3	Activating the system	39
	5.6.4	Heat source selection	39
	5.6.5	Air heating	39
	5.6.6	Water heating	40
	5.6.7	Hydronic S3 fault codes	40
	5.6.8	Additional functions and details	40
5.7	Operation at higher altitudes		40

Chapter Chapter title
Chapter contents

5.8 Winterization 40
5.9 Safety test after lengthy stoppage 41
5.10 Disconnecting power 41
5.11 Control and safety devices 41
5.12 Emergency Stop – EMERGENCY OFF 41

6 TROUBLESHOOTING / MAINTENANCE / SERVICE

6.1 Troubleshooting 41
6.1.1 Hydronic S3 coolant heater 41
6.1.2 Touchscreen 42
6.1.3 Input/output controller 42
6.1.4 Additional troubleshooting support 42
6.2 Maintenance 42
6.3 Service 42

7 ENVIRONMENT

7.1 Certification 43
7.2 Disposal 43

1 Introduction

1.1 Concept of this document

This document supports the service or installation company installing the system and provides the user with all important information about the system. The document is divided into the following chapters to make it easier to find information quickly:

1 Introduction
Important introductory information about use and the structure of this document.

2 Product Information
Information about the scope of supply, technical data and dimensions.

3 Mechanical Installation
Information and notes concerning mechanical installation of the product (e.g. physical mounting, coolant circuit, etc.).

4 Electrical Installation
Information and notes concerning electrical installation of the product.

5 Function / Configuration / Operation
Information on the operating principals of the product, instructions for initial configuration and commissioning, and basic operation.

6 Troubleshooting / Maintenance / Service
Information on possible faults, maintenance and support.

7 Environment
Information about certification and disposal.

NOTE
Please read these instructions and save them for reference.

1.2 General information

This document is to be used to install the system listed on the title page and applies to the exclusion of all liability claims. The installation work may only be carried out by appropriately trained personnel of an Eberspaecher service partner.

Depending on the version or revision status of the system, differences may exist when compared to this documentation. Please check this before carrying out the installation and take into account possible differences.

1.3 Reference documents

Operating instructions, Hydronic AquaSystem
Instruction for the operation of the system by the end user.

Technical description, Hydronic S3
Contains the information necessary for installation and operation of the coolant heater (Hydronic S3) used in the system.

Spare parts list, Hydronic S3
Contains the information necessary for ordering spare parts for the coolant heater (Hydronic S3) used in the system.

Repair instructions, Hydronic S3
Contains the necessary information for troubleshooting and for repair of the coolant heater (Hydronic S3).

Operating instruction, EasyScan diagnostics and service tool
Contains the information necessary for installation and operation of the EasyScan diagnostic tool.

Installation suggestions
Describes vehicle-specific installation situations.

1.4 Special text formats and presentations

Special text formats and picture symbols are used in these instructions to emphasize different situations and subjects. Refer to the following examples for their meanings and appropriate action.

1.4.1 Lists

- This dot (•) indicates a list or action step, introduced by a heading.
  - If an indented dash (–) follows a "dot", this list/action step is a sub-section/secondary step of the black dot.

1.4.2 Cross references

Underlined blue text denotes a cross-reference, which can be clicked in the PDF format. The part of the document named in the text is then displayed.

1.5 Picture symbols

REGULATION!
This information indicates a statutory regulation. Any violation of these regulations results in expiry of the type-approval for the heater and exclusion of any guarantee and liability claims against Eberspaecher Climate Control Systems.

DANGER!
"Danger" indicates a situation that can directly result in death or serious injuries if not avoided.
→ This arrow indicates the appropriate measures to avert the imminent danger.

WARNING!
"Warning" indicates a situation that can potentially result in death or serious injuries if not avoided.
→ This arrow indicates the appropriate measures to avert the potential danger.

CAUTION!
"Caution" indicates a situation that can potentially result in minor or slight injuries if not avoided.
→ This arrow indicates the appropriate measures to avert the potential danger.

NOTE
This note contains recommendations for use and useful tips for the operation, installation and repair of the product.

1.6 Intended use

1.6.1 Range of application of the system

The heating system is intended for installation in the following vehicles:

- Recreational vehicles / motorhomes
- Work vehicles
- Applications similar to the above

1.6.2 Intended use of the heating system

- Heating vehicle interior
- Heating of water for sinks and / or showers

NOTE
Only use and operate the system within the scope of the intended use stated by the manufacturer and in compliance with the documentation for the system.

1.7 Non-Intended use

On account of its functional purpose, the system is not approved for the following applications:

- Long-term continuous operation, e.g. for heating:
  - Residential rooms
  - Garages
  - Work huts, weekend homes and hunting lodges
  - Houseboats, etc.

WARNING!
RISK OF HYPOTHERMIA!

- The system does not replace a temperature-monitored and controlled heating system, which ensures that a constant temperature is maintained and thus ensures survival in adverse weather conditions. It is not suitable for the continuous heating of vehicle interiors at low outdoor temperatures.
- Use, operation and deployment of the product outside the intended use stated by the manufacturer can cause considerable injuries to people and/or damage to machinery and property.

→ Only use the product for the stipulated purpose and in the approved area of use.

1.8 Disclaimer

The manufacturer is not liable for damage caused by improper use or incorrect operation. Failure to comply with the safety instructions makes the guarantee null and void and this leads to the exclusion of any liability of Eberspaecher Climate Control Systems.

1.9 Target groups of this document

This document is intended for the following target groups:

Service company
The "service company" target group includes all service companies trained by Eberspaecher that purchase heaters, air conditioning systems, control units, accessories and spare parts from Eberspaecher or that trade, install, repair, or service these on behalf of an end user.

Installation company
The "installation company" target group includes all companies trained by Eberspaecher that purchase heaters, air conditioning systems, control units, accessories and spare parts from Eberspaecher and install, repair or service these on behalf of another company (normally the motor vehicle manufacturer / body builder).

End user
The "end user" target group includes all natural persons who operate a heater or air conditioning system using a control unit, irrespective of whether as a consumer or as part of their job.

1.10 Duty to instruct of the target groups

Each of the above-mentioned target groups must unconditionally observe its instruction obligation. The instruction obligation includes the passing on of technical documents.

Technical documents are all documents published for the installation, operation, maintenance or repair of heaters or air conditioning systems and their control units, accessories and spare parts from Eberspaecher.

NOTE

- Unless otherwise expressly stipulated below, the technical documents may be passed on in printed form, on a data medium or by internet download.
- The latest technical documents are available for download via the Eberspaecher website.

Responsibility of the installation company
The installation company must pass on the following technical documents to the contracting company, which in turn is obliged to pass the documents on to the end user:

- Technical description
- Operating instructions

Responsibility of the service company
The service company must pass on the following technical documents to the end user, even if they employ a sub-contractor:

- Technical description
- Operating instructions

NOTE

The above-mentioned target groups must ensure that the end users are provided with the operating instructions for the product prepared by the manufacturer in printed form and in the end user's national language. If necessary, this can be an abridged form of the complete operating instructions that is additionally included with the product on a data medium or is available via internet download.

1.11 Hazard information and warnings for installation

Each of the above-mentioned target groups must unconditionally observe its instruction obligation. The instruction obligation includes the passing on of technical documents.

DANGER!

RISK OF INJURY, FIRE AND POISONING.

→ Disconnect the vehicle battery before starting any kind of work.

→ Before working on the heater, switch the heater off and let all hot parts cool down.

CAUTION!

SAFETY INSTRUCTIONS FOR INSTALLATION

- Mark the year of initial commissioning on the nameplate.
- Have the heater installed only by a service partner authorized by the manufacturer according to the instructions in this manual, possibly according to special installation recommendations; the same applies to any repairs to be carried out in the case of repairs or guarantee claims.
- The following measures are not allowed:
  - Changes to heating-relevant components.
  - Use of third party parts not approved by the manufacturer.
  - Deviations from the statutory, safety and / or functionally relevant requirements stated in this document regarding installation and/or operation. This applies in particular to the electrical wiring, fuel supply, combustion air system and exhaust system.
  - Transport and/or storage of the heater or other components by hanging it from the integrated cable harness.
- Only use original accessories and original spare parts for installation and repairs.
- When carrying out electric welding on the vehicle, disconnect the positive cable at the battery and attach it to ground to protect the control box.

→ Replace defective fuses only with fuses with the specified fuse rating.

NOTE

- All deviations from the safety requirements for installation are to be agreed with the manufacturer in writing before they are implemented.
- Following installation, attach the "Switch off heater before refueling!" sticker near the tank filler neck.

1.12 Hazard information and safety instructions for operation

NOTE

The notes in this chapter also apply in part to chapter 1.11. They should therefore also be taken into consideration for the installation.

DANGER!

RISK OF INJURY, FIRE AND POISONING.

- It is not permitted to operate the heater where there are readily flammable materials (e.g. dry grass, leaves, paper, etc.) in the area of the exhaust system or where ignitable fumes and dust can form, e.g. near a
  - fuel depot
  - coal depot
  - wood depot
  - grain storage and similar.
- Risk of poisoning due to escaping exhaust gases. Do not start up the heater in enclosed spaces, e.g. garage or multi-story car park.
- Switch off the system before refueling.

DANGER!

SCALDING BY HOT WATER.

- Water temperatures over 52°C (125°F) can cause severe burns instantly or death from scalding.
- Water temperature at the heat exchanger can be up to 85°C (185°F) during operation and possibly higher in the event of a malfunction.

→ Use a temperature limiting valve to limit the hot water temperature at the faucet or shower.

→ Feel water before bathing / showering. Exercise additional care when bathing children.

WARNING!

WATER QUALITY.

- Only potable water is to be heated.
- The user is responsible for the quality of water and the sanitization of the water delivery system used with this heater.

→ Take precautions to keep the water system free of debris and sanitized to prevent the growth of microorganisms.

WARNING!

EMERGENCY ELECTRICAL SHUT-OFF.

- Emergency shut-off location is vehicle and installation specific.
- Consult with the vehicle's instructions / manual for details.

→ User must be aware of the location of the emergency power isolation.

→ If information is not readily available contact the party responsible for the heater installation for information.

CAUTION!
SAFETY INSTRUCTIONS FOR OPERATION.

- Only use the control units approved by the manufacturer to operate the system and heater. Use of other control units can cause malfunctions.
- Repairs by unauthorized third parties and / or not using original spare parts are dangerous and therefore not allowed. They result in expiry of the type-approval of the heater; consequently, when installed in motor vehicles they can cause expiry of the vehicle operating license.
- If the heater is installed in a safety housing or similar, the heater's installation box must not be used as storage space and must be kept clear. In particular, do not store or transport fuel canisters, oil cans, spray cans, gas cartridges and other hazardous substances, fire extinguishers, cleaning rags, items of clothing, paper etc. on or next to the heater or other components that may become hot.
- Replace defective fuses only with fuses with the specified fuse rating.
- If fuel escapes from the heater's fuel system (leak), arrange for immediate repair of the damage by an Eberspaecher service partner.
- Before the heater is installed again in another vehicle, rinse the heater parts carrying water with clear water.
- Use only anti-freeze products approved by the vehicle builder to top-up; please refer to the relevant manual. Blending with unapproved anti-freeze can cause damage to the engine and heater.
- Do not cancel the after-running of the heater prematurely, e.g. by operating the battery isolating switch or by a battery management system, except for an emergency stop.
- Removing electrical power from any part of the system may not allow for the necessary cooldown cycle to occur. This can result in overheating and boiling of the coolant which can overflow and cause scalding injuries. It can also damage the heater.

NOTE

→ If the heater is switched off by the battery management system the after-running of the heater must be ensured under all circumstances except for an emergency stop.

→ All deviations from the safety requirements for installation and operation are to be agreed with the manufacturer in writing before they are implemented.

1.13 Accident prevention

Always follow all general accident prevention regulations and shop and operating safety instructions.

1.14 Product listing

This product has been tested and is listed for use in recreational vehicles.

C US

2 Product information

2.1 Order No. and scope of supply

2.1.1 Installation kit part numbers

Designation	Order No.
Hydronic AquaSystem NA Install Kit, HS3 D5E 12V	25.2800.10.0001
Hydronic AquaSystem NA Install Kit, HS3 B5E 12V	25.2800.10.0002

2.1.2 Hydronic heaters included in kits

Figure No.	Designation	Order No.
1	HS3 D5E 12V CS	25.2993.05.0000
1	HS3 B5E 12V CS	20.2051.05.0000

2.1.3 Hydronic S3 scope of supply

See diagram in section 2.1.6.

Figure No.	Quantity	Designation
1	1	Heater
2	1	Metering pump
3	1	Coolant pump
1	1	Sensor cover
1	2	Coolant connection
1	2	O-ring
1	1	Screw M5 x 18
---	---	Technical documentation

Refer to Hydronic S3 Spare Parts document for order numbers.

2.1.4 Installation kit scope of supply

See diagram in section 2.1.6.

Figure No.	Quantity	Designation	Order No.
4	1	Touchscreen display	25.2800.70.0034
5	1	I/O control unit	25.2800.70.0033
6	1	High altitude module	25.2800.70.0032
7	1	Plate heat exchanger, double walled	5591173
8	1	Coolant reservoir	25.2800.60.0009
9	1	Thermostatic mixing valve	5591175
10	1	Heating element, 1500W, 120VAC	5567000
11	1	Thermostat switch	5567001
12	1	Y-cord, heating element	5567002
13	2	Silencio 2, air heat exchanger	83.0012.01.4030
14	1	Flexible exhaust pipe, 1000 mm long	20.2900.20.0003
15	1	Flexible exhaust pipe w/ end cap, 300 mm long	20.1731.80.0400
16	1	Combustion air intake silencer, 760 mm long	22.1000.40.0010
17	1	Exhaust silencer	22.1000.40.2100
18	1	Coolant hose	25.2526.80.0102
19	1	Coolant reservoir cap	5591176
20	1	Wire harness, touchscreen	25.2800.70.0029
21	1	Wire harness, control unit, power	25.2800.70.0027
22	1	Wire harness, control unit, output	25.2800.70.0028
23	1	Wire harness, Hydronic S3	20.2900.70.0013
24	2	Extension cable, CAN bus	20.2900.70.0014
25	1	Wire harness, 12V water pump	20.2900.70.0016
26	1	Air temperature sensor	25.2800.70.0030
27	1	Blower diode assy.	25.2800.70.0031
28	1	Bracket, Hydronic S3 mounting	22.1000.51.4200
29	1	Bracket, coolant pump mounting	22.1000.51.3900
30	1	Coolant connection socket, 90°	25.2652.99.8001
31	1	Holder, fuel metering pump	22.1000.50.0300
32	1	Fuel pipe (size specific to heater model)	
-	1 set	Cable ties	
-	1 set	Connection parts, coolant	
-	1 set	Fastening parts	
-	1 set	Fastening parts, fuel	
-	1 set	Fastening parts, heater mounting	
-	1 set	Fastening parts, exhaust / combustion air	
---	---	Installation documents	

Part numbers for parts not listed can be found in the Product Catalogue (available for download from the Partner Portal.)

2.1.5 Connections

See diagram in section 2.1.6.

A Battery connection (12V and ground)
B Hydronic S3 diagnosis plug connection
C AquaSystem NA diagnosis plug connection
D 120 VAC source (switched via 12V)

2.1.6 Overview – system, Hydronic S3 heater, and installation kit

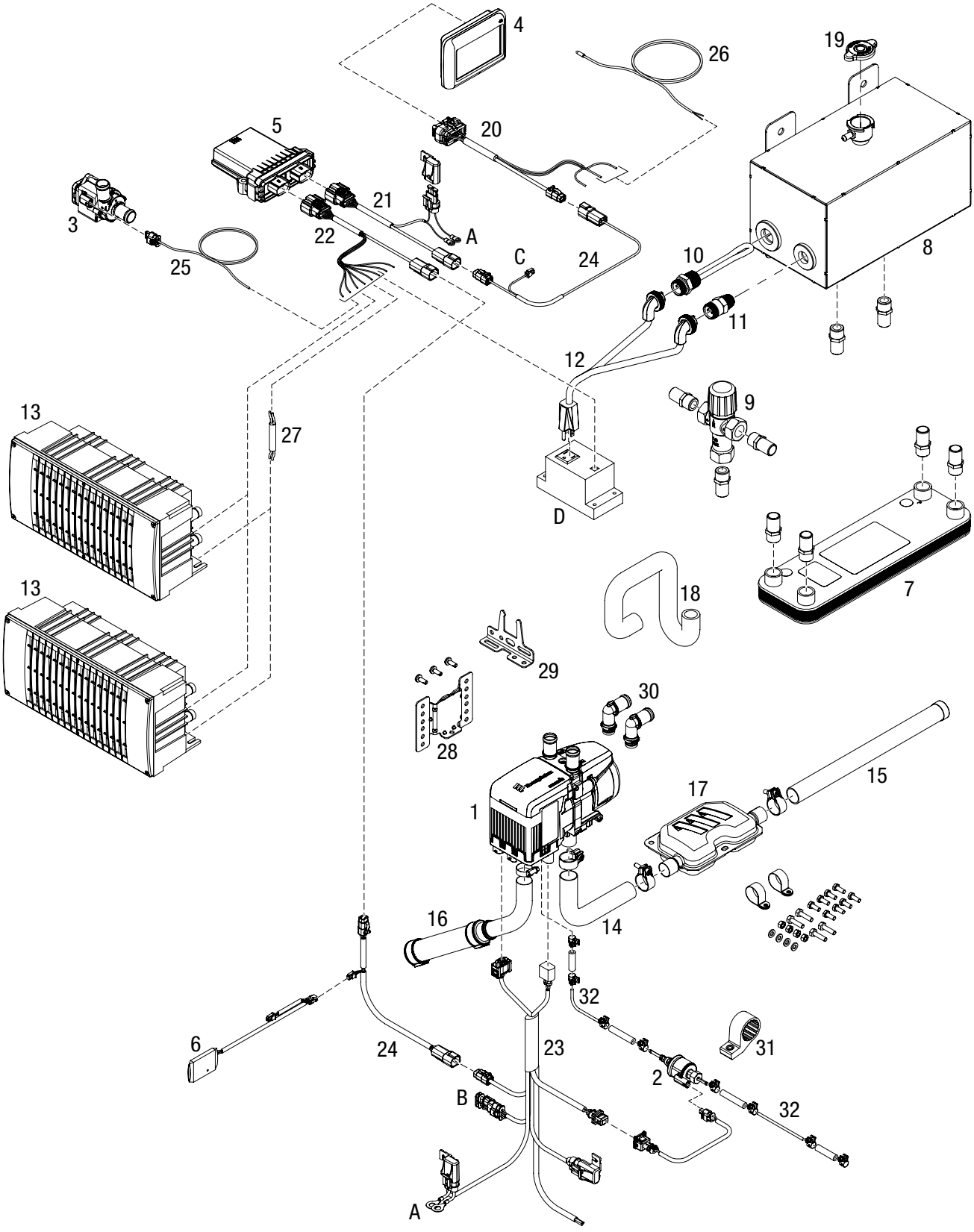

2.1.7 Installation tools and materials not included in scope of supply

- EasyScan Diagnostic tool
- 12 VDC switched 120 VAC receptacle
- Fuel pick-up pipe or other fuel supply connection
- Coolant hose
- Hose connectors
- Hose clamps
- Extension wire and connectors

*See options available in the Product Catalogue (available for download from the Partner Portal.)

2.2 Technical data

2.2.1 Hydronic S3

Coolant heater type			Hydronic S3 Economy			
Version			D 5 E CS		B 5 E CS	
Heating medium			Mixture of water and anti-freeze (Proportion of antifreeze at least 10 % up to 50 % maximum)			
Fuel			Diesel		Gasoline	
Rated voltage			12 volt			
Control of the heat			Maximum	Minimum	Maximum	Minimum
Heat flow (watt)			5000	1300	5000	1800
Fuel consumption (l/h)			0.59	0.15	0.67	0.23
Average electrical power consumption (watt) without water pump, without vehicle fan relay		during operation	32	5	32	7
		while starting	135			
Operating range Lower voltage limit: Undervoltage protection switches off the heater if the lower voltage limit is reached.[1)]			10.5 volts			
Upper voltage limit: Overvoltage protection switches off the heater if the upper voltage limit is reached.			16 volts			
Allowable operating pressure (coolant)			up to 2.5 bar overpressure max.			
Coolant volume (coolant heater only)			approx. 0.09 l			
Minimum coolant flow rate of the heater			300 l/h			
Allowable ambient temperature (Also note and follow the information for installation of the heater and metering pump!)	Heater	during operation	–40 °C to +80 °C		–40 °C to +60 °C	
		not in operation	–40 °C to +105 °C, short-term +125 °C (5 x 2h)			
	Metering pump	during operation	–40 °C to +50 °C		–40 °C to +20 °C	
		not in operation	–40 °C to +105 °C			
	drawn-in combustion air		max. +45 °C short-term +80 °C (15 minutes)		max. +25 °C short-term +45 °C (15 minutes)	
Interference suppression class			5 (EN 55025)			
Weight (coolant heater only, without coolant or additional parts)			2 kg			
Degree of protection DIN 40050, Part 9		Heater (in operation)	IP5K6K[2)]			
		Heater (not in operation)	IP5K9K[2)]			

[1)] The undervoltage limits of the heater must be taken into consideration in the use and design of a battery management system. An installed battery management system may only switch off the heater's power supply below the voltage limits if the response time of 20 seconds ±1 second is taken into consideration.

[2)] The coolant heater is protected against harmful quantities of dust, powerful water jet under increased pressure and water during high-pressure/steam cleaning (provided it is not in operation). The control box is dustproof, completely protected against powerful water jet under increased pressure and water during high-pressure/steam cleaning (provided it is not in operation).

CAUTION!
OPERATING THE HEATER OUTSIDE THE SPECIFIED TECHNICAL DATA CAN CAUSE MALFUNCTIONS.
→ The technical data must be complied with at all times.

NOTE
Provided no other values are given, the technical data provided is with the usual tolerances of ±10 % at rated voltage, 20 °C ambient temperature and reference altitude Esslingen.

2.2.2 Coolant pump

Part number	25.2652.25.0000
Rated voltage	12 volt
Nominal current	max. 1.6 A
Nominal delivery pressure	0.2 bar
Delivery rate	≥ 500 l/h

2.2.3 Silencio 2

Part number	83.0012.01.4030
Airflow	250 m^3/h
Electrical power consumption	16 W

2.2.4 Touchscreen

Part number	25.2800.70.0034
Touchscreen type	Resistive
Resolution	480 (W) x 272 (H) pixels
Luminance	350 cd/m2
Contrast Ratio	650
Operating Voltage	9 V – 32 V
Current*	180 mA
Enclosure	IP67
Recommended Operating Temperature Range	-20 to +70°C
Recommended Storage Temperature	-30 to +80°C

*at 13.5 V with no active inputs or outputs, 100% brightness

2.2.5 Controller – input / output

Part number	25.2800.70.0033
Operating Voltage	9 V – 32 V
Current (normal operation)*	40 mA
Current (sleep)*	15 mA
Enclosure	IP67
Recommended Operating Temperature Range	-40 to +70°C
Maximum total current output	24 A
Max current per output	2 A / 4 A**

*at 13.5 V with no loads

** current rating is output specific. In total, four of each (2 A / 4 A).

2.2.6 High altitude module

Part number	25.2800.70.0032
Operating Voltage	10 V – 16 V
Current	<20 mA
Recommended Operating Temperature Range	-40 to +85°C

2.3 Main component dimensions

2.3.1 Hydronic S3 coolant heater

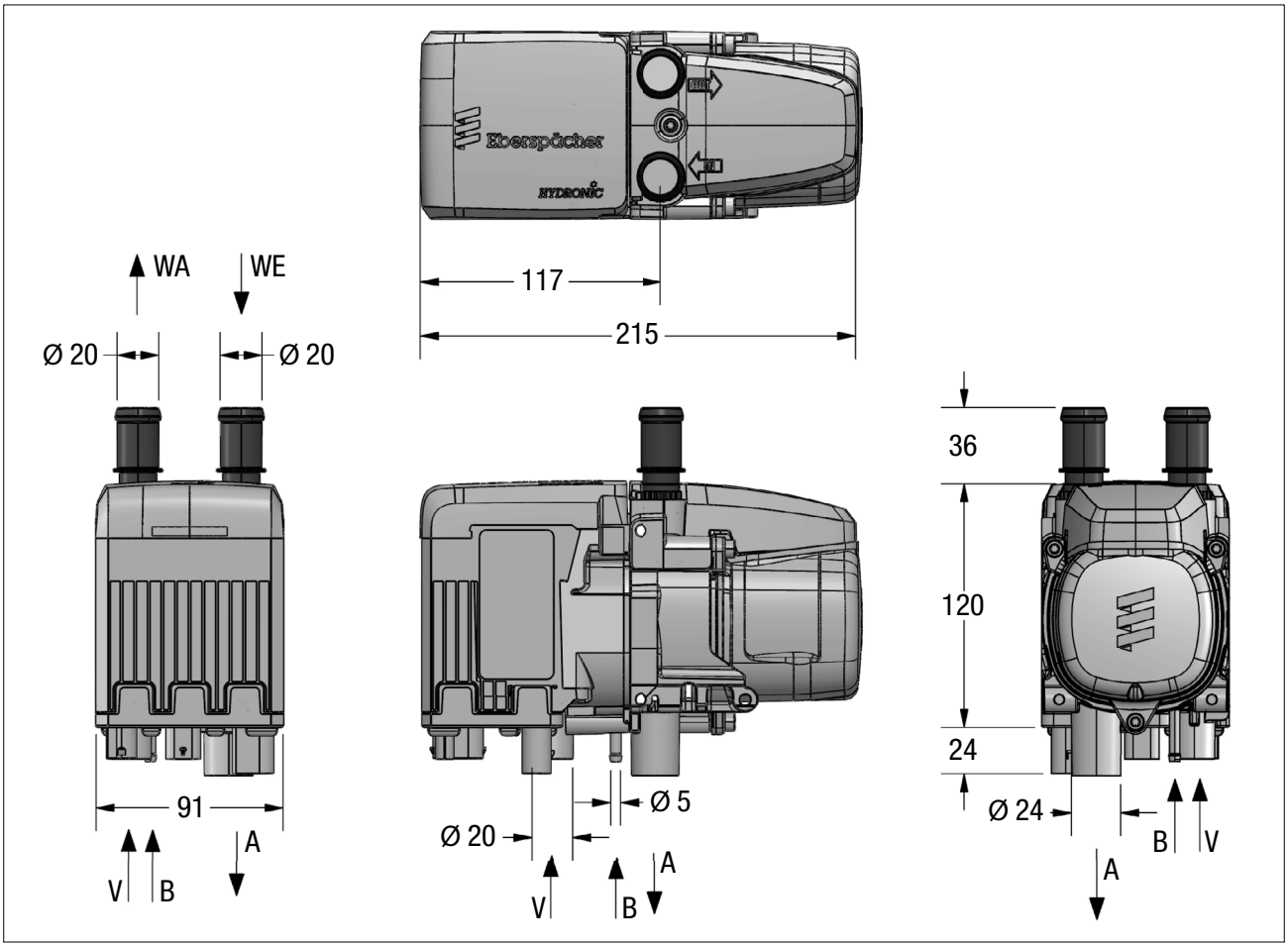

A	Exhaust	WA	Coolant outlet
B	Fuel	WE	Coolant inlet
V	Combustion air		

2.3.2 Coolant pump

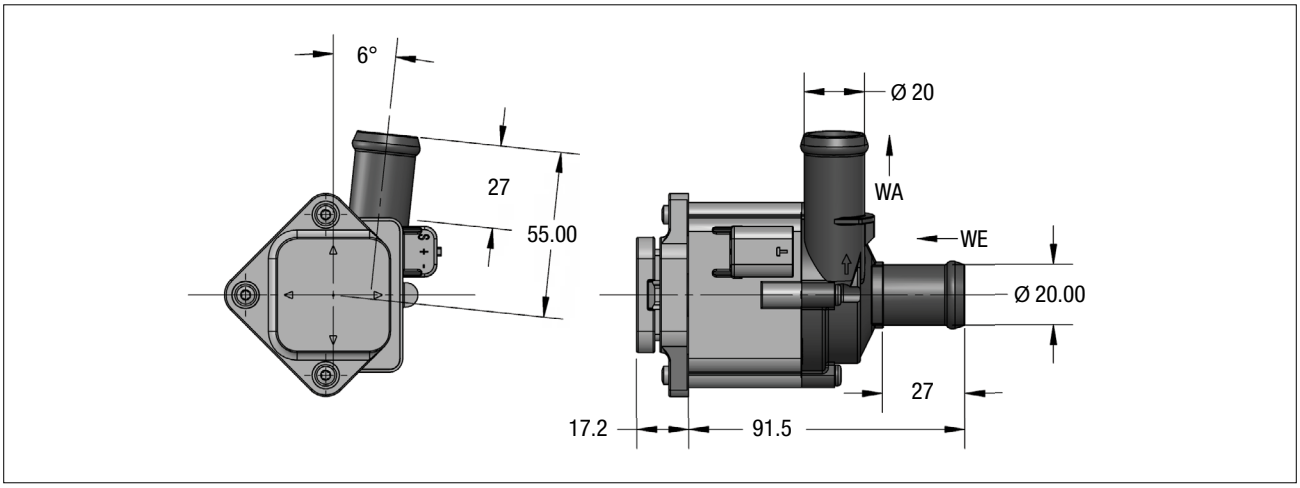

WA Coolant outlet
WE Coolant intlet

2.3.3 Water heat exchanger

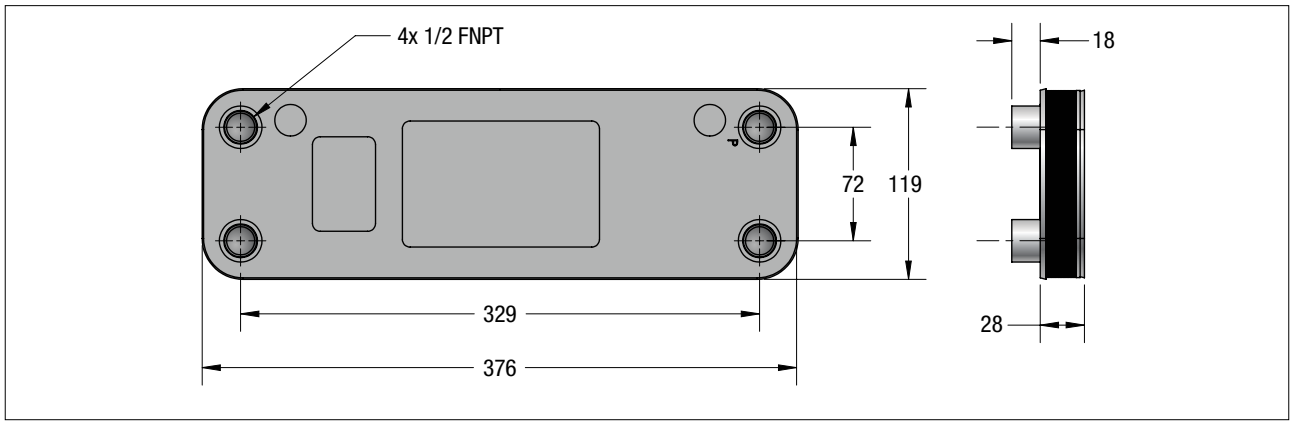

2.3.4 Air heat exchanger

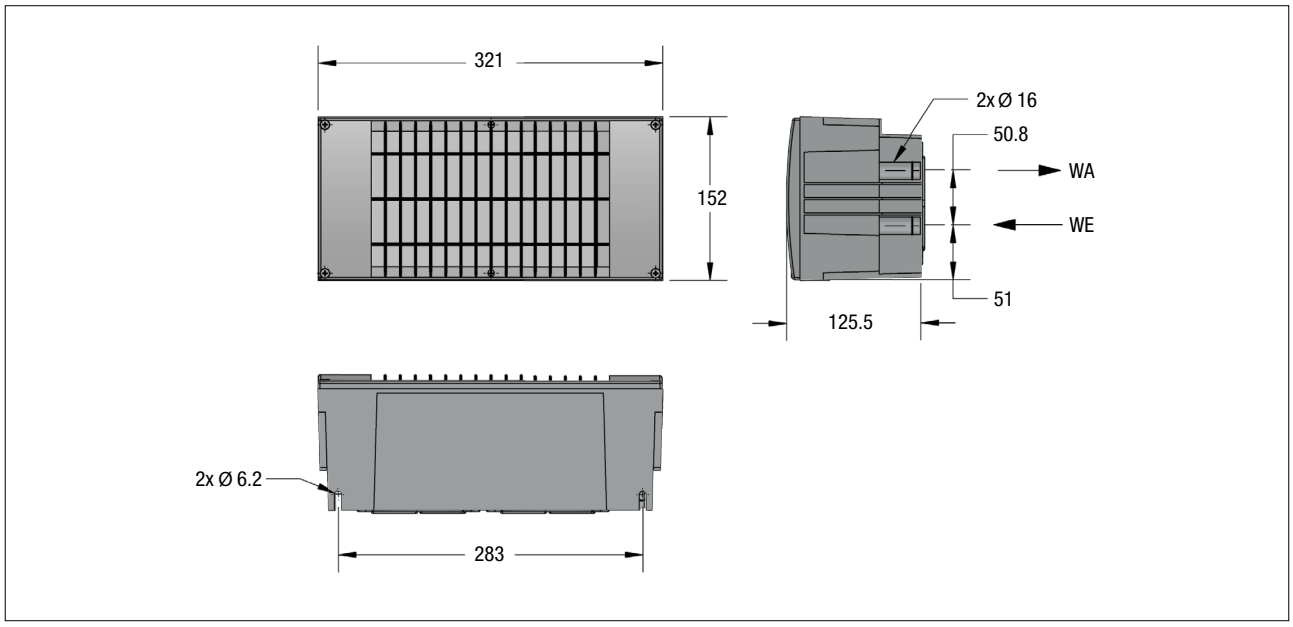

WA Coolant outlet WE Coolant inlet

2.3.5 Coolant reservoir

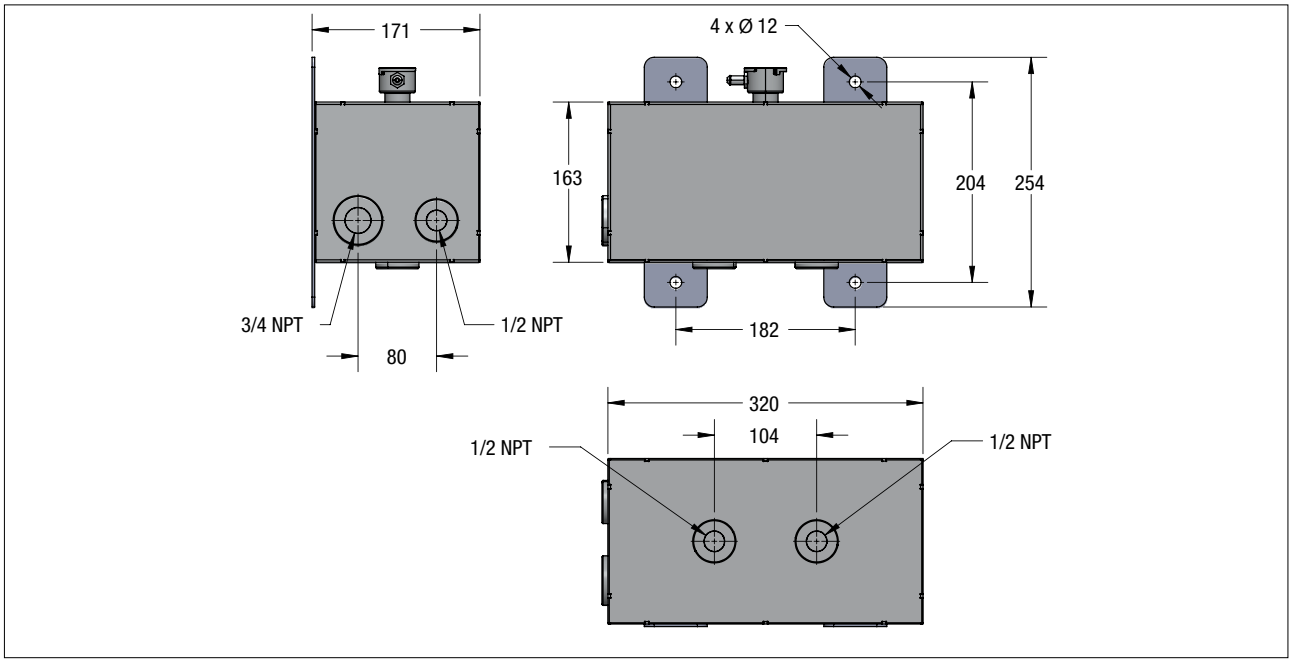

2.3.6 Touchscreen

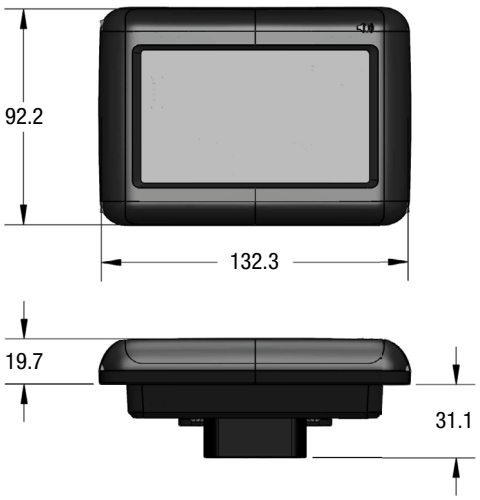

2.3.7 Controller – input / output

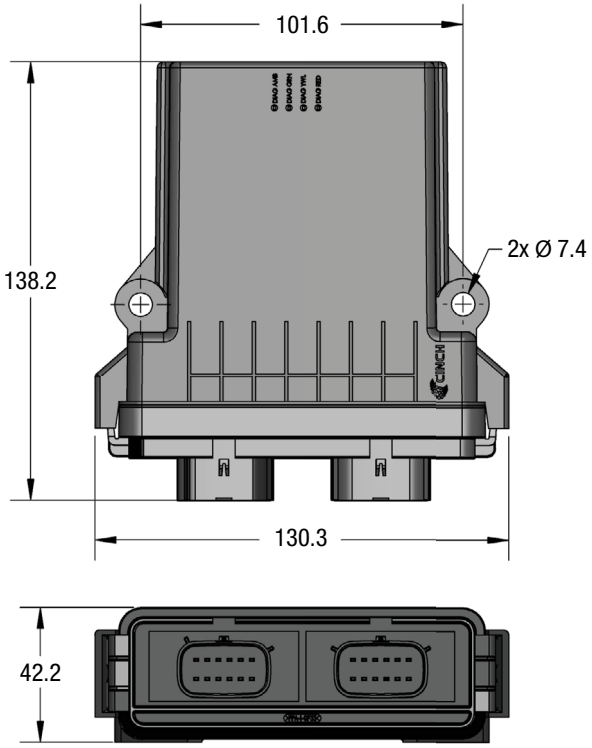

2.3.8 High altitude module

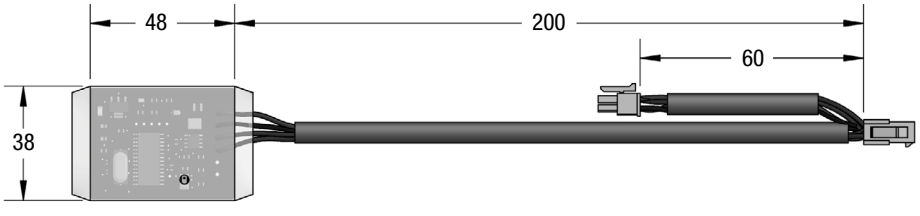

2.3.9 Thermostatic mixing valve

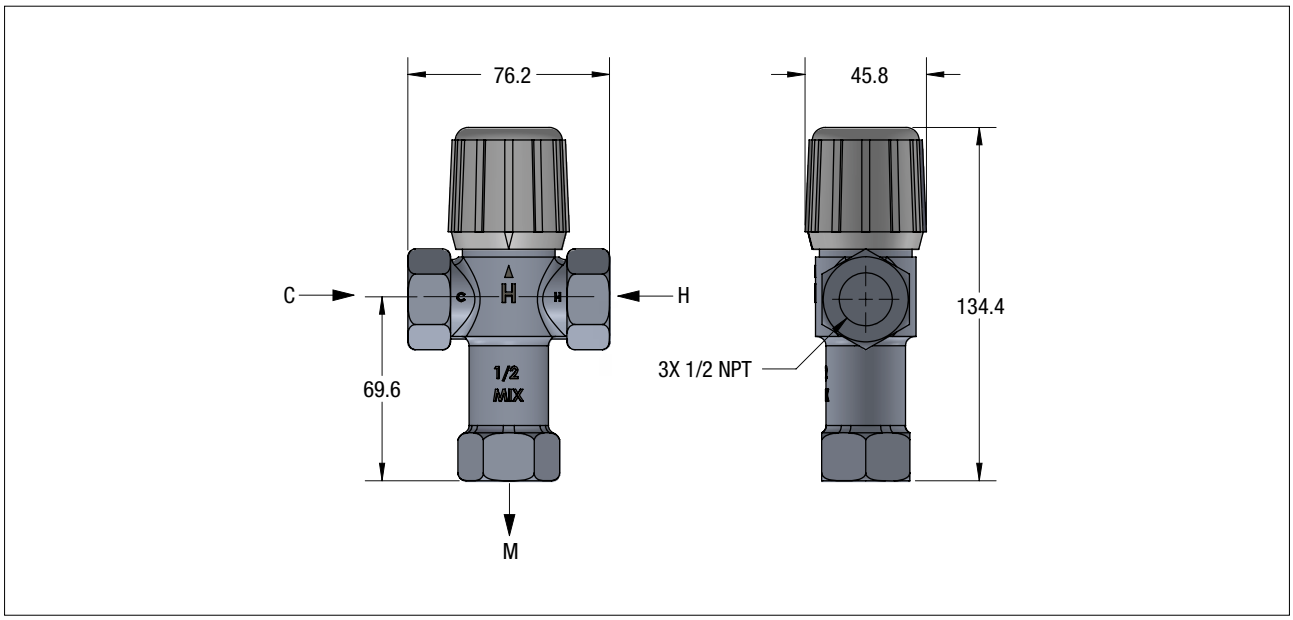

C Cold water inlet
H Hot water inlet
M Mixed water outlet

3 Mechanical Installation

3.1 General installation requirements

- Installation of the equipment shall be in accordance with the regulations of the authorities having jurisdiction.
- Refer to CSA standard B139 for recommended installation practices.
- All field wiring is to be done in accordance with the Canadian Electrical Code, Part I.

3.2 Hydronic S3 coolant heater

This document will only contain instructions for the installation of the Hydronic S3 that are specific, or particularly relevant, to the Hydronic AquaSystem NA.

For general details regarding the installation of the Hydronic S3 refer to the relevant Technical Description. Information found there will include complete instruction for:

- Installation positions
- Installation locations
- Mounting
- Assembling the coolant inlets / outlets
- Connecting to coolant circuits
- Installation of the exhaust
- Installation of the combustion intake
- Installation of the fuel supply

3.2.1 Installation location

DANGER!
RISK OF POISONING.
Do not install the Hydronic S3 inside any compartment, living, and/or sleeping area that may be occupied by people nor in any place where combustion by-products might be drawn into such area!

→ Install the Hydronic S3:
- Under the floor of the vehicle
- In the engine compartment
- A compartment completely sealed from any area that may be occupied by people

NOTE
- Refer to technical description for permitted installation orientations.

3.2.2 Coolant pump

Depending on the installation conditions, the coolant pump can be installed within the allowable swivel ranges, see Picture 1.

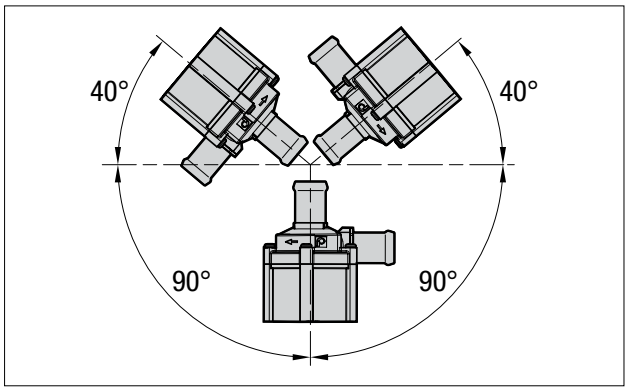

Picture 1

NOTE

- The coolant pump is not self-priming. The coolant inlet must therefore be arranged so that it is always completely filled with coolant liquid.
- Installation of the coolant pump with the pump head facing downwards is not allowed.
- Do not mount the coolant pump at the lowest point of the coolant liquid circuit, as otherwise the particles in the coolant liquid circuit settle in the water pump.

The coolant pump can be mounted directly to the coolant heater using the provided bracket or in another convenient location.

The coolant heater and the water pump must be mounted below the minimum allowable coolant liquid level so that the heat exchanger of the heater and the water pump can vent automatically.

NOTE

- Ensure adequate distance from hot vehicle parts.

3.2.3 Nameplate

The nameplate is fastened to the side of the heater. The second nameplate (duplicate) is enclosed with the heater and must be placed in a clearly visible position in the vehicle, see Picture 2.

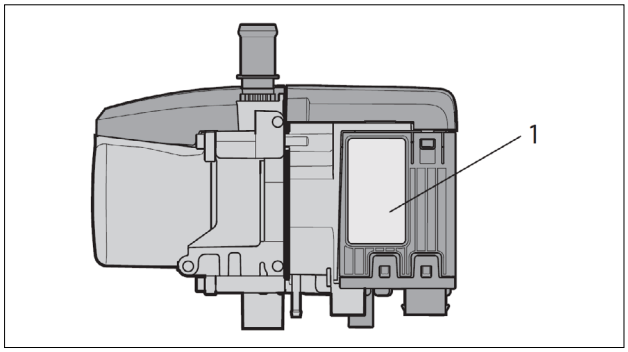

Picture 2

1 Nameplate

3.2.4 Combustion exhaust system

NOTE

These are not complete instructions for the installation of the combustion exhaust system.

→ Refer to the Hydronic S3 technical description document for detailed combustion exhaust installation instructions.

→ Angle the exhaust tip approximately 15° down and do not point in the direction of travel.

DANGER!

RISK OF INJURIES AND POISONING.

During combustion toxic exhaust fumes are produced.

→ Do not route the exhaust through the interior of the vehicle.

→ Do not terminate the Hydronic S3 exhaust under the vehicle or any place where exhaust gases might be drawn into the vehicle (e.g. near windows or vents).

→ Do not inhale exhaust fumes.

DANGER!

RISK OF INJURIES AND BURNS.

During combustion high temperatures are produced.

→ Do not perform any work on the exhaust system while the heater is working.

→ Before working on the exhaust system, switch off the heater first and wait until all the parts have completely cooled down, wear safety gloves if necessary.

WARNING!

RISK OF BURNS.

The entire exhaust system is very hot while the heater is running and immediately afterwards. This is why the exhaust system must always be routed as described in the installation instructions.

→ Refer to the Hydronic S3 technical description document for detailed exhaust installation instructions.

3.2.5 Combustion intake system

Ensure that:

- Combustion air is not being drawn from occupied areas.
- Exhaust gases are not allowed to be drawn in as combustion air.
- The combustion air intake is not directed against the vehicle's air stream (i.e. not pointing in the direction of travel).
- The combustion air system is sloped slightly downwards. If it is not, make a drain hole of approx. Ø 5 mm at the lowest point to drain off condensation.
- Fastening clips or cable ties are used to support the combustion air intake hose to the vehicle.

NOTE

These are not complete instruction for the installation of the combustion intake system.

→ Refer to the Hydronic S3 technical description document for detailed combustion air intake installation instructions.

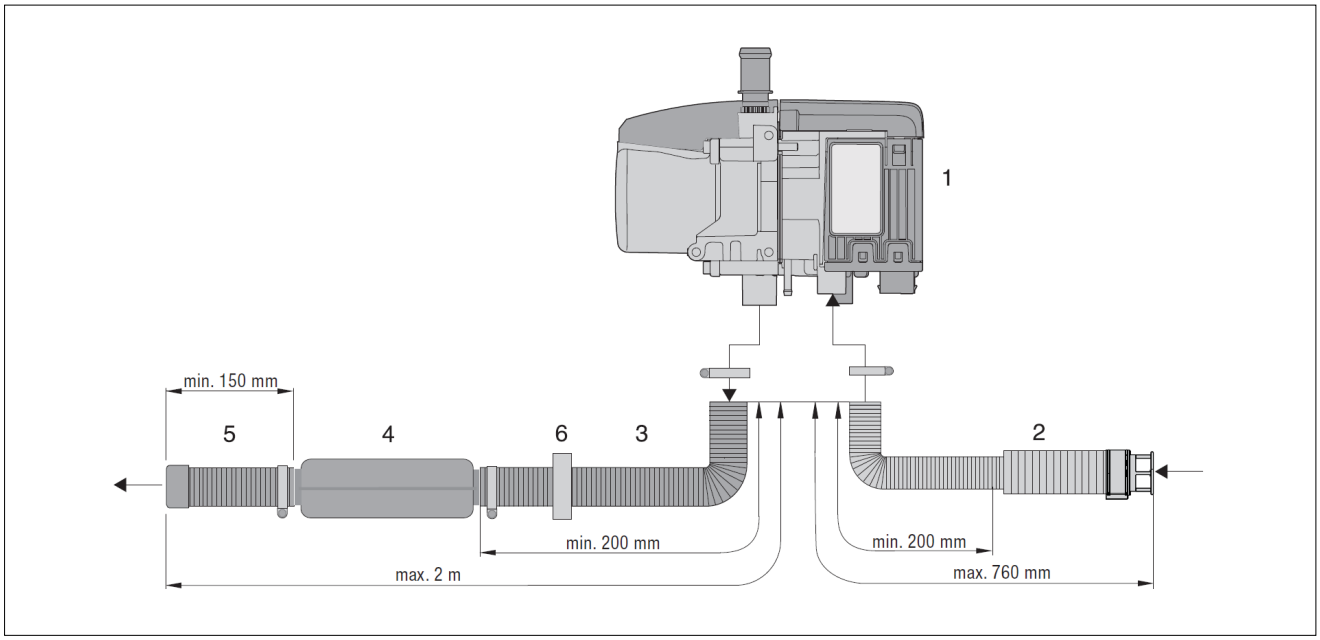

Picture 3

1 Hydronic S3
2 Combustion air intake silencer
3 Flexible exhaust pipe
4 Exhaust silencer
5 Exhaust pipe end with end sleeve
6 Spacer ring (not included in the scope of supply)

3.2.6 Fuel supply

DANGER!
RISK OF FIRE, EXPLOSION, POISONING AND INJURY! CAUTION WHEN HANDLING FUEL.
- → Switch off the vehicle engine and the heater before refueling and before working on the fuel supply.
- → No naked flames.
- → Do not smoke.
- → Do not inhale fumes.
- → Avoid any contact with the skin.

NOTE
These are not complete instruction for the installation of the fuel supply system.
- → Refer to the Hydronic S3 technical description document for detailed fuel system installation instructions.

3.2.6.1 Fuel Lines

WARNING!
ALWAYS NOTE AND FOLLOW THESE SAFETY INSTRUCTIONS WHEN INSTALLING THE METERING PUMP AND WHEN LAYING THE FUEL LINES. DEVIATIONS FROM THE INSTRUCTIONS ARE NOT ALLOWED. FAILURE TO COMPLY CAN RESULT IN MALFUNCTIONS.
- → Cut the fuel hoses and pipes to length at right-angles and burr-free. The cut location must not be crushed /pressed in.
- → Wherever possible, lay the fuel lines from the metering pump to the heater with a continuous rise.
- → Fix fuel lines securely to avoid damage and / or noise due to vibrations (Recommendation: fixing points at spacing of approx. 50 cm).
- → Protect the fuel lines against mechanical damage.
- → Lay the fuel lines so that any twisting of the vehicle, engine movements, etc. do not have a disadvantageous effect on their durability.
- → Do not lay fuel lines in the vehicle interior or route them through the vehicle interior.
- → Parts carrying fuel must be protected from interfering heat.
- → Use screw clamps to secure all hose connections of the fuel supply.
- → Never route or fasten the fuel lines along the exhaust systems of the heater or vehicle engine.
- → Where fuel lines cross the exhaust system, always ensure sufficient thermal clearance, if necessary attach heat deflection plates.
- → Dripping or evaporating fuel must never be allowed to collect on hot parts or ignite on electric equipment.
- → When connecting fuel lines to a fuel hose, always install the fuel lines with a butt joint to prevent any bubbles from forming, see Picture 4.

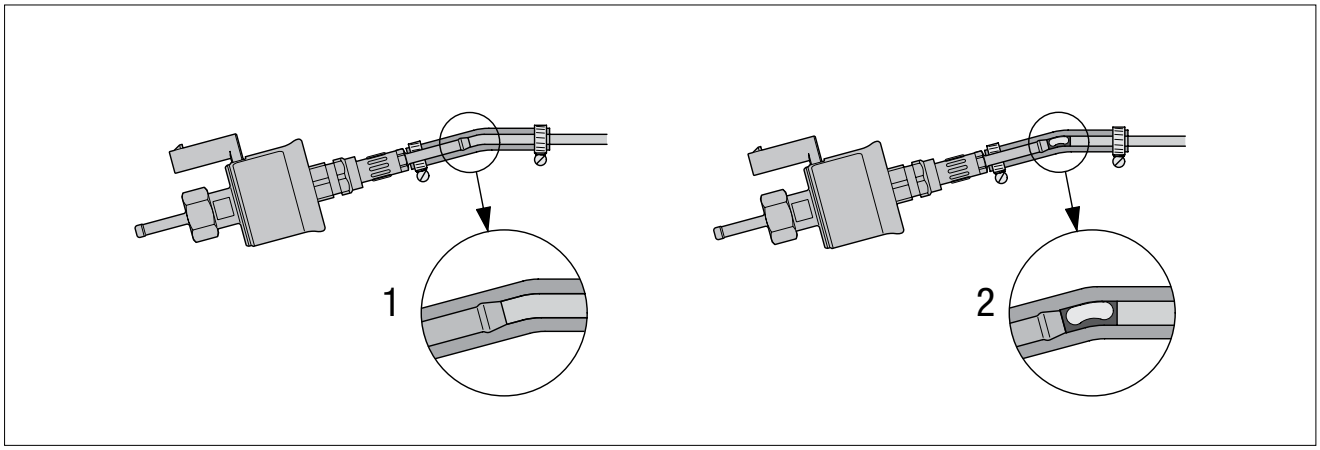

Picture 4
1 Correct connection
2 Incorrect connection – bubbles collect

3.2.6.2 Connecting to vehicle's fuel tank

⚠ WARNING!
SAFETY INSTRUCTIONS FOR FUEL SUPPLY!
THE FUEL MUST NOT BE CONVEYED BY MEANS OF GRAVITY OR OVERPRESSURE IN THE FUEL TANK.
→ The fuel may only be pumped by the metering pump included in the scope of supply and approved by the manufacturer.

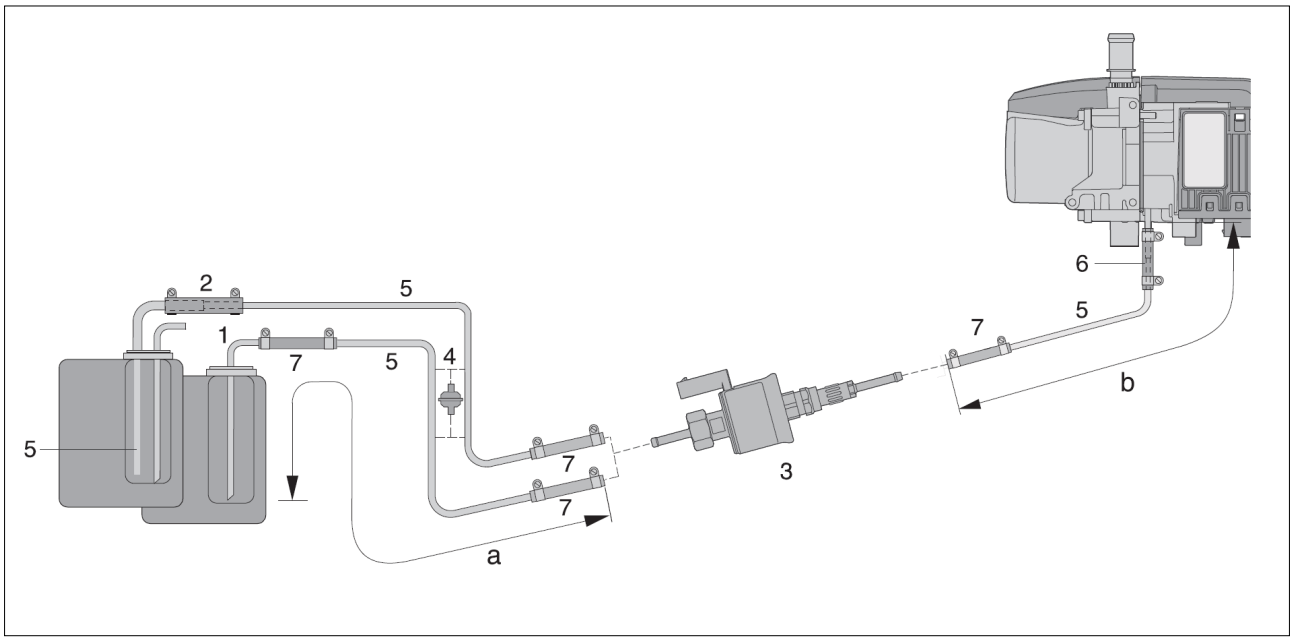

Picture 5

1 Tank connection (di = Ø 2 mm, da = Ø 4 mm) – installed in the vehicle's own tank fitting
2 Adapter (Ø 7.5 / 3.5 mm) – connected to the vehicle's own tank fitting, at a socket Ø 8 mm, used to pass through the intake line (fuel pipe 4 x 1) up to just before the bottom of the tank.
3 Metering pump
4 Fuel filter – only required for contaminated fuel
5 Fuel pipe, 4 x 1 (di Ø 2 mm)
6 Adapter (Ø 4.5 / 3.5 mm)
7 Fuel hose, 3.5 x 3 (di Ø 3.5 mm), approx. 50 mm long

Permissible line lengths
Intake side: a = max. 2 m
Pressure side: b = max. 6 m

NOTE
FUEL SUPPLY MOUNTING INSTRUCTIONS, see Picture 5

- Items 1, 2, and 4 are not included in the scope of supply.
- Connect fuel pipe (Item 5) to the heater using adapter (Item 6). The adapter (Item 6) with diameter 4.5 mm fits on the fuel sockets of the heater. The smaller diameter 3.5 mm fits on the fuel pipe.
- Use two screw clamps Ø 11 to secure the adapter Ø 7.5 / 3.5 mm (Item 2) (tightening torque: 1+0.2 Nm).
- When installing tank connection (Item 1), maintain a minimum distance of 5±2 mm from the end of the riser to the bottom of the tank.

3.2.6.3 Installing the metering pump

NOTE

METERING PUMP INSTALLATION INSTRUCTIONS.

→ Do not install the metering pump and filter near silencers and exhaust pipes and therefore protect against unacceptable heating (petrol max. 20 °C, diesel max. 50 °C).

→ Always install the metering pump with the delivery side rising upwards. Any installation position between 15° and 90° is allowed.

→ Preferred installation position: between 15° and 35°, see Picture 6.

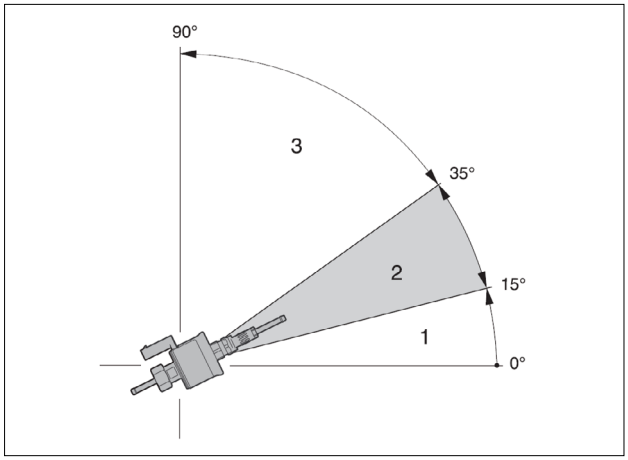

Picture 6

1 Installation position between 0° – 15° is not allowed
2 Preferred installation position within the range 15° – 35°
3 Installation position within the range 35° to 90° is allowed

3.2.6.4 Allowable suction and pressure head of the metering pump

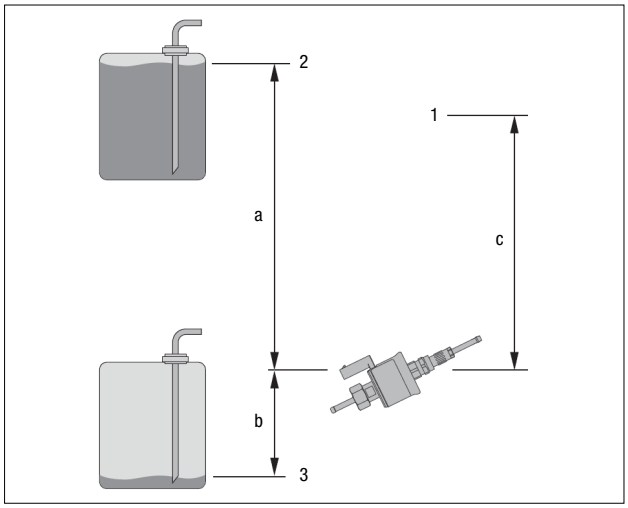

Picture 7

1 Connection at the heater
2 Max. fuel level
3 Min. fuel level

Pressure head from vehicle tank to metering pump:
a = max. 3000 mm

Suction head in pressure-less vehicle tank:
b = max. 500 mm for gasoline
b = max. 1000 mm for diesel

Suction head in a vehicle tank in which negative pressure occurs during extraction (valve with 0.03 bar in the tank cap):
b = max. 150 mm for gasoline
b = max. 400 mm for diesel

Pressure head from the metering pump to the heater:
c = max. 2000 mm

3.2.7 Fuel types

Only use the fuel type specified for the specific heater model. Refer to the Technical Description document and the relevant Technical Data section for the specific heater model.

3.2.7.1 Fuel quality for gasoline heaters

The heater runs problem-free on standard commercial quality fuel, which you use to run your vehicle engine. Commercially available, maximum blending of ethanol to DIN 51600 and EN 228.

NOTE

The HS3 B5E is not approved for operation with ethanol fuel E85 to DIN 15293.

3.2.7.2 Fuel quality for diesel heaters

The heater runs on standard commercial grade diesel fuel to EN 590 with max. 30 % biodiesel content (FAME). In case of storage periods longer than 30 days it is advisable to use FAME-free products, as ageing effects can have a negative effect on the fuel, especially regarding its flow properties and filterability.

During the winter months the diesel fuel is adapted to the low temperatures of 0 °C to -20 °C. This means that problems can only arise if extreme drops in temperature occur – as is the case for the vehicle engine too – please refer to the vehicle manufacturer's instructions.

DO NOT USE GASOLINE, CRANKCASE OIL, OR ANY OIL CONTAINING GASOLINE.

3.3 Coolant reservoir

WARNING!
RISK OF INJURY, SCALDING AND BURNS.
Failure to install a suitable hose to the coolant overflow port and route the hose appropriately or failure to keep the coolant over flow unobstructed can result in injury.
→ Ensure a suitable hose is affixed to the overflow port on the reservoir
→ Route the overflow hose to a location that will avoid someone from coming into contact with hot coolant.
→ Do not plug the overflow port or connected hose.

WARNING!
RISK OF DAMAGE AND OVERHEATING.
DO NOT OPERATE THE ELECTRIC ELEMENT WHILE THE HEATING ELEMENT OR THERMOSTAT IS EXPOSED TO AIR.
- If the element is heated while exposed to the air its sheath can become over heated and burst.
- The thermostat is unable to regulate the electric element if both it and the element are not submerged in coolant.

→ Only operate the electric heating element when submerged in coolant.
→ Check the coolant level in the reservoir regularly and top up as required.

NOTE
- Use thread sealant on all NPT connections. Do not use excessive amounts to avoid contaminating the coolant system.
- Reservoir is to be mounted so that the fill port is oriented upward and at the highest point in the coolant system.

The coolant reservoir contains ports for filling, overflow, coolant inlet, coolant outlet, a heating element and thermostatic switch.

1/2" NPT fittings on the bottom of the reservoir allow coolant to flow into and out. Barb fittings are provided for connecting typical 3/4" I.D. rubber coolant lines. Different connections can be fitted as required.

The heating element is to be installed in the 3/4" NPT port on the side of the reservoir. The thermostat switch is to be installed in the 1/2" NPT fitting on the side of the reservoir.

The coolant reservoir is designed to be vented to atmosphere during operation via the overflow port. The radiator style cap closes the fill port during operation.

The coolant overflow port is located on the side of the filler neck. A hose should be installed on the overflow port (not included in scope of supply) and routed to a suitable location that can accept any coolant that overflows from overfilling or thermal expansion in the system.

The volume of the coolant reservoir is approximately 8 liters.

3.4 Air heat exchanger

DANGER!
RISK OF BURNING AND INJURIES.
→ The hot air system is to be laid and fastened in such a way that it does not pose a risk to people, animals or materials sensitive to temperature due to radiation, contact or direct blowing.
→ Safety grilles (included) must be fitted to the air intake side and outflow side, to prevent injuries from the fan or burns for the heat exchanger.

It is recommended that the heat exchanger be mounted on a flat horizontal surface secured with 2 screws. To facilitate the purging of air from the system coolant is to flow in through the lower coolant connection and out though the upper connection, see diagram in section 2.3.4.

If the heat exchanger must be mounted vertically ensure that the coolant connections are positioned on top to facilitate the purging of air, see Picture 8.

The rear of the units must have access to an air return to be able to draw air to be heated in from the living area.

To assist with even heat distribution and allow for air mixing by natural convection the units should be installed at floor level to drawn in naturally cooler air and allow the heated air to rise.

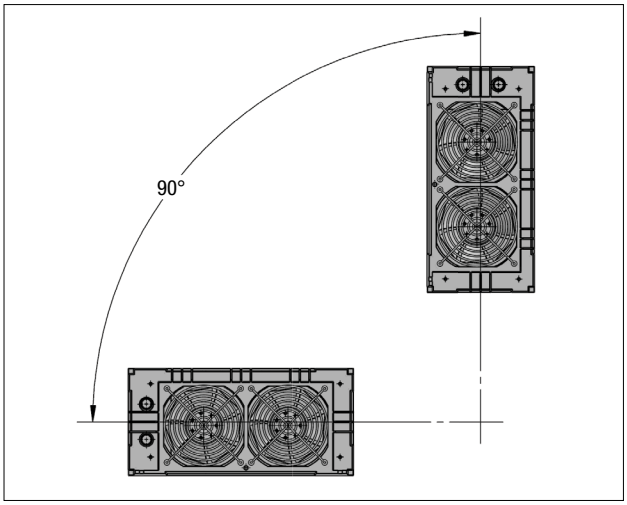

Picture 8

NOTE
Ensure that the proper size hoses and/or adaptors are used to connect to the coolant connection points on the Silencio 2 (the Silencio 2 is available with either 16 or 22mm coolant connections).

3.5 Water heat exchanger

The water heating plate heat exchanger can be mounted in any orientation.

Heat exchanger has female 1/2" NPT fittings for connecting to coolant and fresh water circuits. Adaptors for hose barb connections are supplied in the kit. Use of other fitting to suit the application is permitted.

For coolant and water inlet / outlet locations see Picture 9.

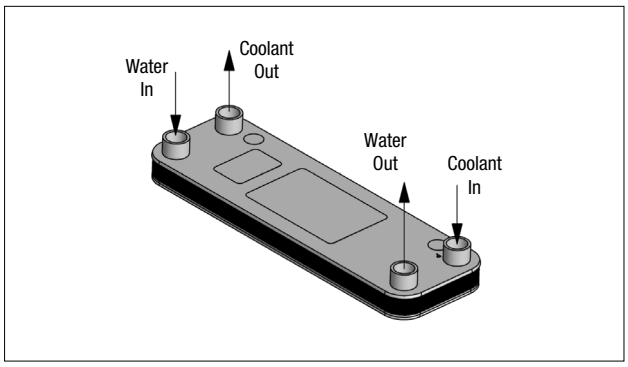

Picture 9

NOTE

Plate heat exchanger needs to be fixed securely to prevent movement and unacceptable stress on the coolant and water connections.

3.6 Thermostatic mixing valve

DANGER!

SCALDING BY HOT WATER!

WATER TEMPERATURES OVER 52°C (125°F) CAN CAUSE SEVERE BURNS INSTANTLY OR DEATH FROM SCALDING.

- → Adjust thermostatic mixing valve to ensure water temperature at faucets is < 50°C prior to delivery to end user.
- → Discharge temperature is to be set and locked as per manufacturer instructions supplied with the mixing valve.
- → Setting must be written on provided label and affixed to the mixing valve.
- → No shut off can be installed between the cold-water line and the cold-water inlet to the mixing valve.

The water heating portion of the system uses a thermostatic mixing valve to provide a consistent water temperature in a variety of operating conditions and protect the user from injury.

The supplied valve has an adjustment range of 21°C to 63°C.

Valve can be installed in any position suitable for the application but must remain accessible for cleaning, servicing or adjustment.

Valve is to be maintained according to manufacturer recommendations.

1/2 NPT fittings are provided for connection to 3/4" ID hoses. These can be replaced with other fittings to suit the specific plumbing of the vehicle. For a diagram for the water connections see section 2.3.9.

3.7 Domestic water plumbing

DANGER!

SCALDING BY HOT WATER.

- → Water temperatures over 52°C (125°F) can cause severe burns instantly or death from scalding.
- → Water temperature at the heat exchanger can be up to 85°C (185°F) during operation and possibly higher in the event of a malfunction.
- → Use of a temperature limiting valve to limit the hot water temperature at the faucet or shower is mandatory.
- → Feel water before bathing / showering. Exercise additional care when bathing children.

WARNING!

WATER QUALITY.

- → Only potable water is to be heated.
- → All plumbing materials must be approved for use with potable water.
- → The user is responsible for the quality of water used and the sanitization of the water delivery system used with this heater.
- → Take precautions to keep the water system free of debris and sanitized to prevent the growth of microorganisms.

NOTE

- The domestic water supply is not within the scope of supply of this system. Information included here is for reference only.
- Follow all applicable regulations and standards for the design of the domestic water system.

A simple reference plumbing diagram is shown in picture 10.

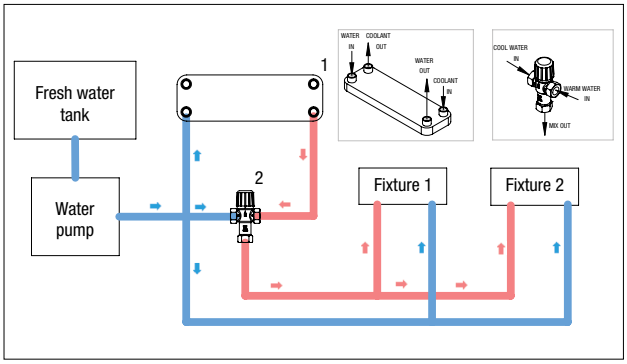

Picture 10

1 Water heat exchanger

2 Thermostatic mixing valve

3.8 Coolant circuit

DANGER!
RISK OF INJURY, SCALDING AND BURNS.
The high temperatures of the coolant liquid and the coolant liquid circuit components can cause injuries, scalding and burns:
- When hot the coolant level rises and can spill.
- If the overflow drain becomes clogged hot fluid may spurt from the fill opening when opened.

→ Before working on the coolant liquid circuit, wait until all components have cooled, wear safety gloves if necessary.
→ Lay and fix parts carrying coolant liquid in such a way that they pose no temperature risk to people, animals or material sensitive to temperature.

NOTE
- When installing the heater note the flow direction of the coolant liquid in the circuit.
- Fill the heater and hoses with coolant before connecting to the coolant liquid circuit.
- Lay the water hoses without any kinks, and as far as possible in a rising position.
- When laying the water hoses, maintain sufficient distance from hot vehicle parts and sharp edges.
- Protect all water hoses / water pipes from chafing and from extreme temperatures.
- The minimum coolant flow rate is ensured if, at a coolant temperature > 60 °C, the temperature difference in the heating medium between the water inlet and water outlet does not exceed 10 K.
- Before initial commissioning of the heater or after changing the coolant liquid, the entire coolant liquid circuit including heater must be purged of air bubbles.
- Fix water hoses securely to prevent damage due to vibrations.
  Recommendation: Fix hoses / pipes approximately every 20 cm using hose clips, pipe clips or cable ties.
- The fluid level must be checked regularly and the reservoir tank should be kept close to full.
- Due to the expansion of the system and the variability of system configurations the exact minimum and maximum fill level will be installation specific.
- System should remain full even when placed into storage.
- Fluid should be regularly replaced according to the fluid manufacturer's recommendations.

3.8.1 Simple circuit

A basic coolant circuit for delivering heated air and water is show in Picture 11 and contains all of the critical coolant carrying components in a single series circuit.

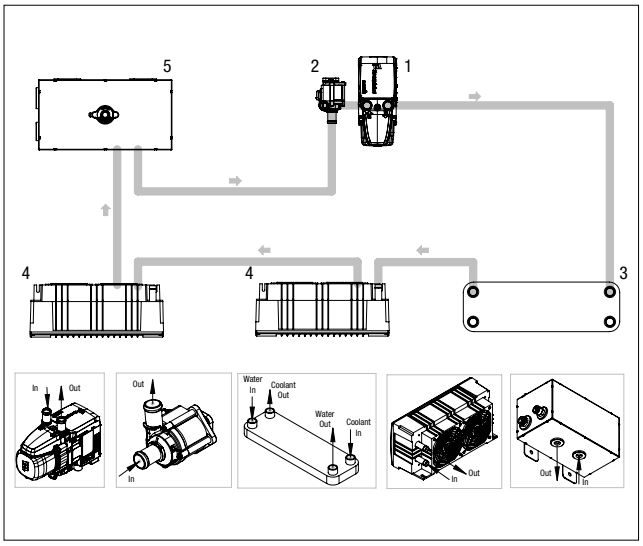

Picture 11

1	Hydronic S3	4	Air heat exchanger
2	Coolant pump	5	Coolant reservoir
3	Water heat exchanger		

NOTE
- It is recommended that the coolant pump be the first component downstream of the reservoir.
- The inlet and outlet on the coolant tank can be swapped to suit the installation.

3.8.2 Other circuits

Other coolant circuits configurations can be used to suit the needs of the application. They can include, but are not limited to, engine pre-heating, engine heat scavenging, radiant heating (including in floor heating), parallel flow, multiple heating loops, etc.

Long or complex coolant circuits may require either more powerful or additional coolant pumps and relays.

NOTE
- If the coolant system flow rate is too low the Hydronic S3 may overheat and generate faults.
- Low flow rates will result in a decrease in maximum heater performance before any faults are observed. Hydronic S3 performance can be monitored with the EasyScan diagnostic tool.

3.8.3 Coolant mixture requirements

The recommended fluid for use in the heating system is a mixture of commercially available deionized water and antifreeze (glycol) at a ratio 60 : 40 (de-ionized water : glycol).

Ensure that the glycol selected is safe for use with the components that are likely to be present in the heating system which include, steel, aluminum, brass, rubber (natural and synthetic), plastics, and rated for use at the elevated temperatures seen in the heating system.

For colder temperatures this mixture can be adjusted beyond the mixture recommended. The resultant increase in fluid viscosity may affect the flow rate of coolant within the system.

CAUTION!
DO NOT MIX DIFFERENT TYPES OF GLYCOL TOGETHER.
This can lead to:
- Deterioration of the fluid.
- Buildup of material within the system.

→ Only add fluid identical to that already present.
→ If changing fluid, completely flush the old coolant from the system.

NOTE
- Even if freezing is not expected the coolant liquid circuit must contain a minimum of 10 % antifreeze all year round as corrosion protection.
- During cold periods the coolant liquid circuit must contain sufficient antifreeze to prevent freezing and damage to the system
- Periodically check the glycol concentration using a commercially available tool.
- Estimated freezing points for a water / glycol mixture:

Water : Glycol	Freezing point (estimated)
60 : 40	-23°C (-10°F)
50 : 50	-36°C (-34°F)

3.8.4 Filling the system with coolants

When filling the system with coolant the objective is to fill all components and remove all air pockets from the coolant circuit.

First fill the reservoir with coolant and allow it to settle. Subsequently activate the systems coolant pump and monitor the reservoir's coolant level and top up as the level drops. As air is purged from the system air bubbles will be seen flowing into the reservoir. Pump coolant through the system for several minutes until air bubbles no longer appear in the reservoir. Take care the reservoir level does not fall too low as this may introduce additional air into the system.

Depending on the size and complexity of the system an additional high flow coolant pump may be needed during installation to more easily clear all air pockets. This pump should be temporarily installed so the direction of flow augments that of the system's pump.

In systems with multiple possible coolant paths each path should be bled systematically until the whole system is completely bled. If valves are present in the installation they may need to be manually actuated to accomplish this.

NOTE
- The fluid level must be checked regularly and the reservoir tank should be kept close to full. Due to the expansion of the system and the variability of system configurations the exact maximum fill level will vary according to the installation.
- When in storage do not drain the system of coolant. Doing so will necessitate a repeat of this filling procedure.

3.9 Touchscreen

The touchscreen is mounted by passing four #6-32 screws through the mounting panel and into the back of the touchscreen.
For cut-out and hole pattern dimensions see Picture 12.

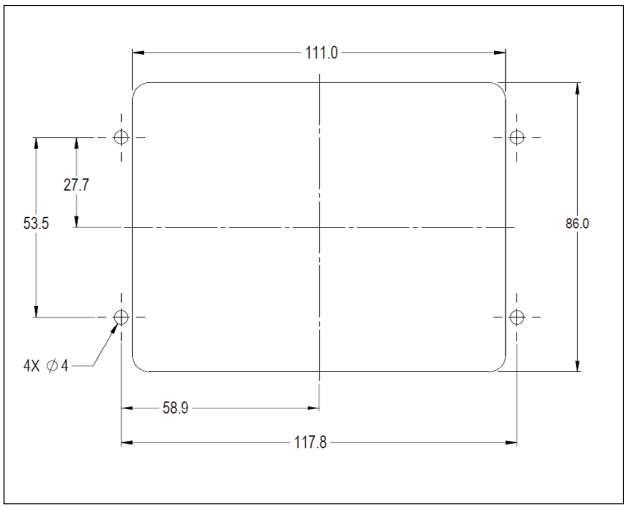

Picture 12

Alternative mounting using a RAM® ball and socket system is also possible.

NOTE
- Recommended torque for #6-32 mounting screws is 10 in.lb. (1.13 Nm)

3.10 Input/output controller

The controller can be mounted in any orientation that suits the application.

For installation hole pattern see section 2.3.7.

3.11 Room temperature sensor

NOTE

- Do not fit the temperature sensor near a hot air outlet or heat exchanger.
- Do not fit the temperature sensor in or near the path of blowing warm air.
- Install the sensor where it is protected from drafts.
- Install the sensor where it is protected from direct sunlight.

The room temperature sensor needs to be positioned correctly to allow for accurate and consistent air temperature control.

The sensor is provided without a housing. Inconspicuous installation is possible by drilling a hole in the selected surface and inserting the sensor so that the thermistor head is protruding into the area where the measurement is to be taken. Material can be wrapped around the sensor to act as a bushing and maintain a secure fit. The sensor and cable are then secured to the panel with suitable methods such as clips or cable ties. See picture 13.

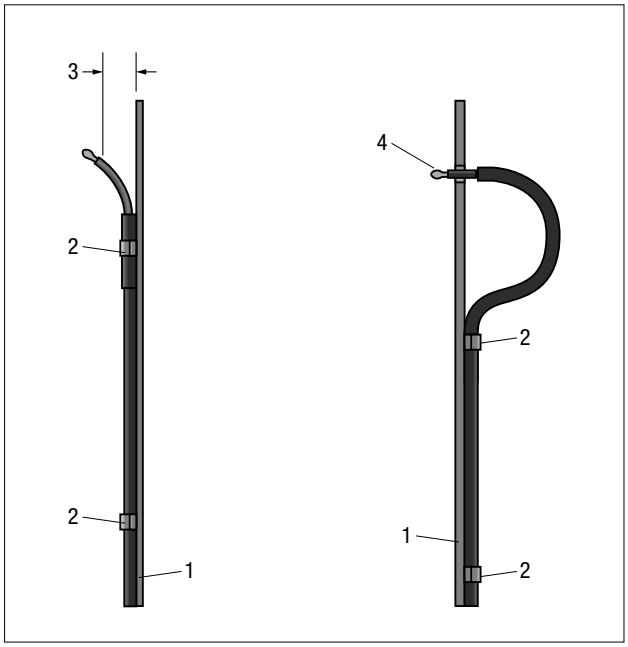

Picture 13

1 Wall or panel
2 Cable support
3 Maintain gap between sensor and mounting surface
4 Ensure sensor is protruding into airspace being measured

NOTE

- Ensure that the sensor head is not in contact with the mounting surface.
- Locate the sensor so that it is protected from incidental contact.

3.12 High altitude module

The high altitude module reads ambient air pressure and transmits the information to the Hydronic S3. The unit can be located anywhere that is exposed to atmospheric pressure and protected from the elements. A vented compartment inside the vehicle is an ideal location. The device should be secured with clips or cable ties to protect it from damage from movement or vibration.

NOTE

- Module must be exposed to atmospheric air pressure (e.g. interior of vehicle).
- Do not expose to water or moisture.

4 Electrical Installation

NOTE

- Position electrical cables and components in the vehicle so that they are not adversely affected by normal operating conditions (e.g. due to heat exposure, moisture, etc.).
- Use cable lengths and cable cross-sections that ensure that the maximum voltage drop in the cables does not exceed 0.5 V for any part of the 12 V system.
- When connecting to a battery though a battery management system ensure it is able to handle the high current load that can occur without cutting power or significantly reducing the voltage to the system.
- Insulate the ends of any unused wires.

4.1 Wiring instruction

The wiring harnesses and connections are universal. As such additions or modifications may be required based on the specific layout and/or requirements of the installation.

Refer to section 4.2 for electrical circuit diagrams. Identifiers used on diagrams are referenced throughout this section (e.g.: -F2, -XS3, -XB13, $u2^x$, etc.).

NOTE

Where conductors need to be extended it is the responsibility of the installer to select appropriate wires, cables, and/or connectors for the application and expected electrical load.

4.1.1 Hydronic S3 wiring

A harness to connect to the Hydronic S3 is provided.

The 3-pin coolant pump connector on the Hydronic S3 is not used.

Direct connections from the Hydronic S3 harness to battery (+), via the fuse provided (-F2), and ground (-) are strongly recommended.

The fuel metering pump cable must be cut to length and terminated with the contacts and housing provided (-XB13) before being connected to the Hydronic S3 harness (-XS13).

The 3-wire cable (yellow, red, and brown wires) is not used. The cable can be trimmed and the individual wires should be insulated to avoid shorting (u2ˣ).

The 4-pin CAN bus 120Ω terminating resistor cap will not be needed. The CAN bus branch of the harness (-XB11) will be connected through the extension cable to CAN-E branch of the I/O controller (-XS3).

The EasyScan diagnostic connector (-XS12/-XB12) should remain accessible for service functions.

NOTE

- Do not connect anything to the 3-pin connector on the Hydronic S3. It is not used in the AquaSystem NA.
- The coolant pump is not controlled directly by the Hydronic S3.
- In some situations the Hydronic S3 may need to be configured before it can operate properly within the AquaSystem. See section 5.4.

4.1.2 Touchscreen, I/O controller, High altitude module, and Room temperature sensor

The harnesses provided for the touch screen and the I/O controller come partially terminated. The main connectors are pre-assembled, but a number of the input and output wires are delivered unterminated (pigtail) and need to be extended to the appropriate lengths based on the positioning of different components in the vehicle.

I/O controller

Two harnesses are provided for the I/O controller. The first (I/O controller power harness) must be connected to power and ground through the provided fuse (-F1). It also contains a CAN branch (CAN-P) for connection to the touchscreen harness (-XS5) either directly or through the provided extension cable.

The second (I/O controller output harness) contains the CAN branch (CAN-E) (-XS3) for connection to the Hydronic S3 harness (-XB11) through the provided extension cable. There is also a pigtail for the various output connections (e.g. coolant pump, heat exchangers, electric heating, etc. (-X1, d, e, u1ˣ) .

Touchscreen

The touchscreen harness contains a CAN branch (CAN-P) (-XB7) for connection to the I/O controller harness (-XS5), either directly or through the provided extension cable. Power is supplied through the CAN cable from the I/O controller harness. There is an unterminated wire provided for connecting to the room temperature sensor (-X2).

Room temperature sensor

The room temperature sensor is to be connected to the specified wires of the touchscreen harness (-X2). Field connections are required.

High altitude module

The high altitude module plugs into the extension cable between the I/O controller and the Hydronic S3 (-XB16/-XS16).

NOTE

Be careful not mix the connections for the CAN-E and CAN-P communication buses. Devices on each bus:

- CAN-E: I/O controller, high altitude module, and Hydronic S3
- CAN-P: I/O controller and touch screen

- Extension wire/cable required for a complete installation are not included in the scope of supply.
- The extension cables provided for connecting the I/O controller to the touchscreen and the I/O controller to the Hydronic S3 need to be cut to the appropriate lengths and terminated with the contacts and housings provided.
- The harnesses have integral CAN bus terminating resistors. Take care not to bend the harnesses where indicated.
- After assembly the resistance across the CAN wires on each bus should be 60Ω ± 2Ω (measured with the system turned off). The CAN-E resistance can be measured at -XB12. CAN-P resistance can be measured at -XB15.
- Take care when assembling the connectors to not mix up the CAN bus wires (blue with red stripe and blue with black stripe).
- CAN cables should not be extended using anything other than the provides extension cables.
- Avoid running CAN cables alongside AC or high current DC cables if possible to minimize signal interference.

4.1.3 Air heat exchangers (Silencio 2)

In its default configuration the AquaSystem provides 3 discrete outputs for fan speed (low, medium, and high). In order for the Silencio 2 heat exchangers to operate at 3 discrete power level they must be wired through the supplied diode assembly (-E2) as per the schematic in section 4.2.2.

When high fan speed is activated both fans on the Silencio 2 will operate in high speed. When medium fan speed is activated both fans on the Silencio 2 will spin at a slower speed. When low fan speed is activated only one fan will be activated per unit.

As the proximity of the heat exchangers to the controller will vary depending on the application the harness wires are intended to be extended by the installer to the lengths required for the application.

For applications with different heat exchanger quantities or other blower units contact technical support.

NOTE

- Extension wire/cable required for a complete installation is not included in the scope of supply.

4.1.4 Coolant pump

A standard Hydronic S3 coolant pump cable is included in the scope of supply. This cable will need to be modified before use.

One end of the cable (-XB18) plugs into the coolant pump (-M1). The other connector must be removed and the wires connected as per the schematic in section 4.2.1.

NOTE

- Do not use the provided coolant pump cable without modification.
- The coolant pump cable is not to be connected directly to the Hydronic S3.
- The Hydronic S3 must be configured to operate with "no pump installed". See section 5.4.
- Some installations may require the coolant pump cable to be extended due to the location of the component. In such a case wires must maintain an acceptable voltage drop.

4.1.5 Electric heating (120 VAC)

WARNING!

DO NOT CONNECT THE ELECTRIC HEATING ELEMENT TO AN UNSWITCHED RECEPTACLE.

- Doing so will result in the element being energized whenever 120 VAC is available, increasing the chances of unintentional activation and potential damage.

→ Connect the electric heating cable to a receptacle that is switched by the Hydronic AquaSystem.

NOTE

- 120 VAC circuit used must be protected by ground fault circuit interruption. This is not included in the scope of supply and is the responsibility of the installer.
- The AC circuit used must be able to supply 15A and have appropriate circuit protection.
- The switching device to be used is not included in the scope of supply. The selection of a switching device suitable for the application is the responsibility of the installer.
- Extension wire/cable not included in the scope of supply may be required for a complete installation.

The supplied y-cable is to be connected to the thermostat switch and heating element on the coolant reservoir, see picture 14. The cable connects the two devices in series so that when the switch reaches its set point temperature the heating element is switched off.

Tighten the connector rings by hand.

Refer to schematics in section 4.2.3 for electrical connection details.

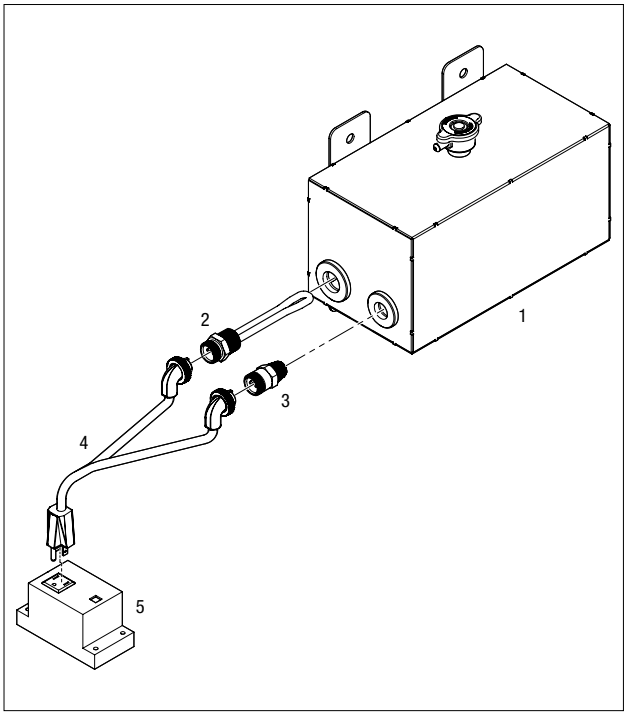

Picture 14

1	Coolant reservoir	4	Y-cable
2	Heating element	5	120V switching device
3	Thermostat switch		

4.2 Circuit diagrams

4.2.1 Main harness connections

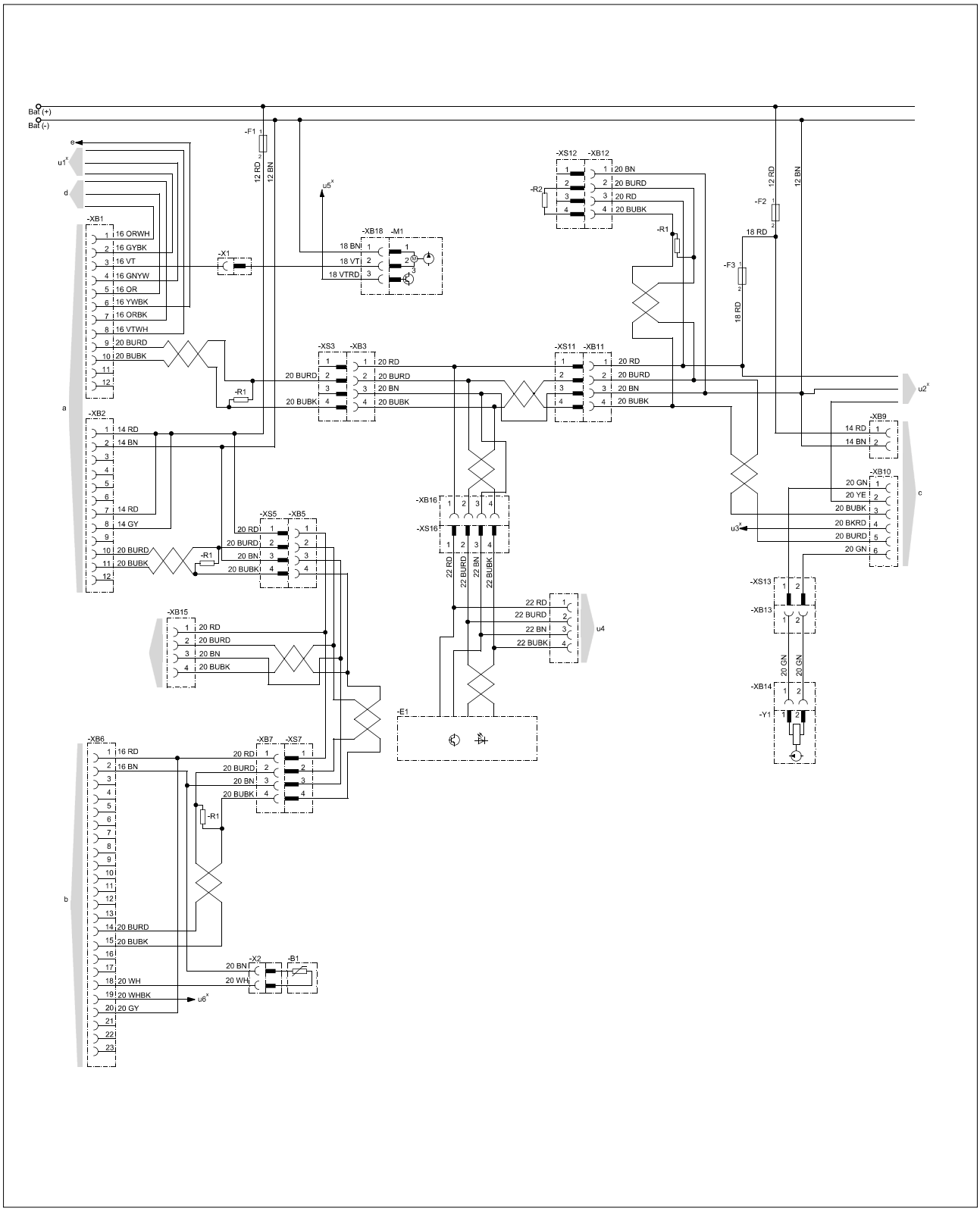

Parts list and part numbers on next page

Schematic Parts list

-B1	Room temperature sensor
-E1	High Altitude Module
-F1	Controller power fuse (20A)*
-F2	Hydronic S3 power fuse (12V=20A / 24V=15A) *
-F3	Hydronic S3 control fuse (12V=20A / 24V=15A) *
-M1	Coolant pump
-R1	120 Ohm resistor
-R2	10k Ohm resistor
-X1	Coolant pump power *
-X2	Room temperature sensor*
-XB1	I/O controller J2 connection
-XB2	I/O controller J1 connection
-XB3	I/O controller CAN-E connection
-XB5	I/O controller CAN-P connection
-XB6	Touchscreen connection
-XB7	Touchscreen CAN-P connection
-XB9	Hydronic S3 power connection
-XB10	Hydronic S3 control connection
-XB11	Hydronic S3 CAN-E connection
-XB12	EasyScan connection
-XB13	Fuel pump extension cable connection*
-XB14	Fuel pump connection
-XB15	CAN-P diagnostics / programming connection
-XB16	High altitude module CAN-E connection
-XB18	Coolant pump connection
-XS3	I/O controller CAN-E connection
-XS5	I/O controller CAN-P connection
-XS7	Touchscreen CAN-P connection *
-XS11	Hydronic S3 CAN-E connection *
-XS12	EasyScan connection cap
-XS13	Fuel pump extension cable connection
-XS16	Altitude module CAN-E connection
-Y1	Fuel metering pump
a	I/O controller
b	Touchscreen
c	Hydronic S3
d	Air heaters fan control *
e	Electric heating output *
u1	reserved for future features *
u2	unused control branch*
u3	unused output for relay*
u4	unused CAN-E connection
u5	unused wire *
u6	reserved for future features *
x	insulate and tie back unused cables

*Field connection, or connector assembly required.

Part Descriptions, Part Numbers and Connections

I/O controller power harness	25.2800.70.0027	-F1, -R1, -XB2, -XS5, a
I/O controller output harness	25.2800.70.0028	-R1, -XB1, -XS3, -X1, a, d, e, u1
Touchscreen harness	25.2800.70.0029	-R1, -XB6, -XB7, -X2, b, u6
CAN-P extension cable	20.2900.70.0014	-XB5, -XB15, -XS7
Hydronic S3 harness	20.2900.70.0013	-F2, -F3, -R1, -R2, -XB9, -XB10, -XB11, -XB12, -XB13, -XB14, -XS12, -XS13, u2, u3, c
Air temperature sensor	25.2800.70.0030	-B1, -X2
High altitude module	25.2800.70.0032	-E1, -XS16, u4
CAN-E extension cable	20.2900.70.0014	-XB3, -XB16, -XS11
Coolant pump cable	20.2900.70.0016	-XB18, -X1, u5

Wire colours

BK	black
BN	brown
BU	blue
GN	green

GY	grey
OR	orange
RD	red
VT	violet

WH	white
YE	yellow

4.2.2 Air heat exchangers and diode assy.

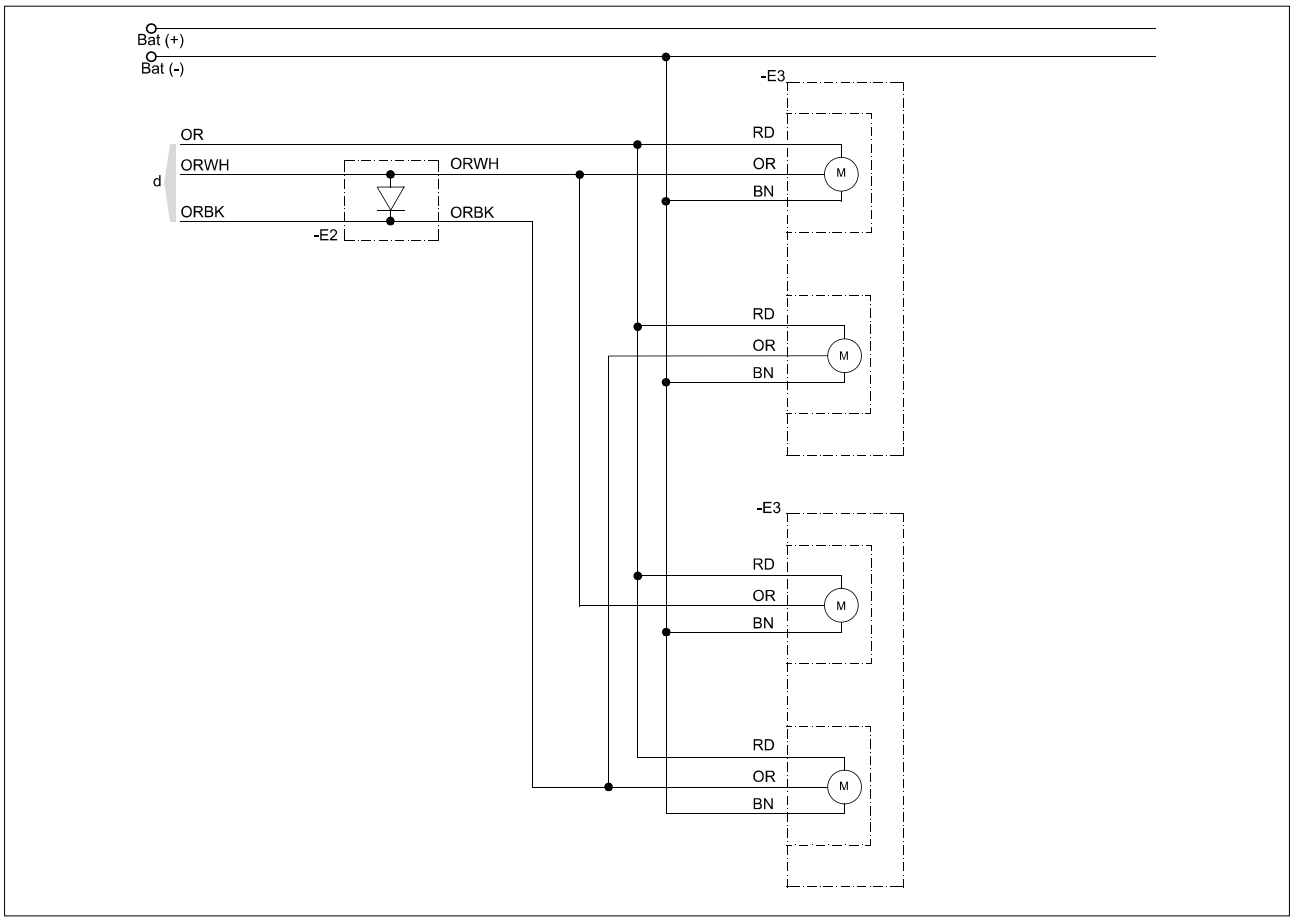

Parts list

-E2	Diode assembly*	25.2800.70.0031
-E3	Air heat exchanger (Silencio 2) *	83.0012.01.4030
d	to I/O controller harness *	

*Field connection required.

Wire colours

BK	black	RD	red
OR	orange	WH	white

4.2.3 Electrical heating (120 VAC)

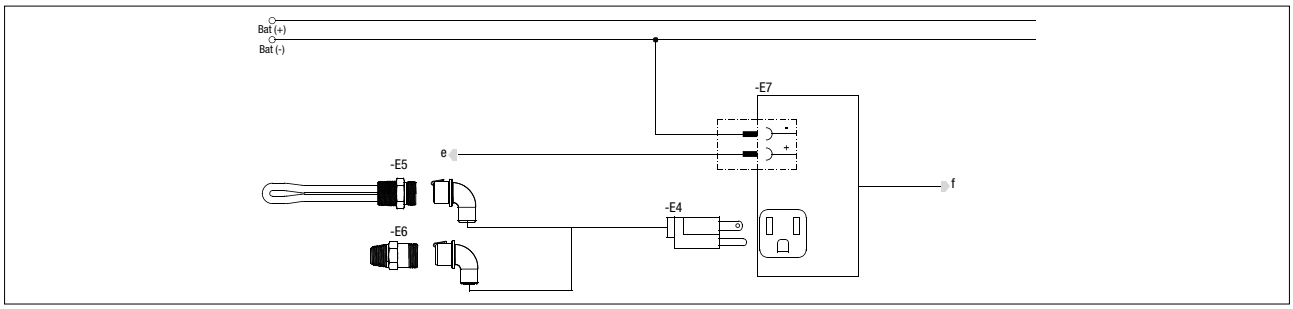

Parts list

-E4	Y-cable	5567002	-E7	Switching device	
-E5	Heating element	5567000	e	to I/O controller harness *	
-E6	Thermostat switch	5567001	f	to mains power (120 VAC)	

*Field connection required.

5 Function / Configuration / Operation

5.1 Description of the heating system

The heating system is designed to heat the air in the living area and provide hot water for sinks and/or showers. It works on the principle of circulating a heated coolant and utilizing heat exchangers to transfer that heat to the air and/or water as required.

Air is heated by means of heat exchangers with integrated fans to move the air being heater. The system is able to automatically adjust their operating speed to regulate the rate of heat transfer and maintain a consistent temperature. Manual speed selection is also available.

Water heating is accomplished via a double walled thin plate heat exchanger. Cold water is pumped into the heat exchanger as needed, there it absorbs heat from the system coolant and the resultant heated water is passed through a thermostatic mixing valve to regulate its temperature before going on to the fixtures. As water is heated only when needed there is no hot water storage tank.

The primary heat source for the system is a diesel or gasoline burning coolant heater (Hydronic S3). In addition, there is also an auxiliary electric heating element (if installed) that can provide additional heat when connected to a switched 120 VAC power source.

When in operation the fuel operated coolant heater (Hydronic S3) works to maintain a constant coolant temperature by adjusting its output based on the heating demand. If there is little or no heat being extracted from the system the coolant heater will automatically switch off, turning back on again when needed.

The Hydronic S3's combustion process is adjusted based on atmospheric pressure measured by the system. Automatic compensation occurs up to altitudes of 3000 m (9,800 ft.).

The main components of the system include a touchscreen display, I/O controller, Hydronic S3 coolant heater, coolant circulating pump, air heat exchangers, water heat exchanger, thermostatic mixing valve, high altitude module, and coolant reservoir with integrated heating element and thermostat.

5.2 Heating with diesel or gasoline

⚠ DANGER!
RISK OF FIRE, EXPLOSION, POISONING AND INJURY!
CAUTION WHEN HANDLING FUEL.
- → Switch off the vehicle engine and the heater before refueling and before working on the fuel supply.
- → No naked flames.
- → Do not smoke.
- → Do not inhale fumes.
- → Avoid any contact with the skin.

When the fuel operated coolant heater (Hydronic S3) is selected as the heat source it will be activated whenever a heating function (air or water heating) is activated. The heater will go through an ignition cycle and then work to maintain the system coolant at a defined operating temperature.

If the coolant heater experiences a fault a notification will be displayed on the user interface. If the heater fails to ignite or loses its flame while running it will attempt to restart before generating a fault.

The fuel for the heater is taken either from the main vehicle fuel tank or from a separate auxiliary fuel tank.

Refer to setion 3.2.7 for fuel quality requirements.

ⓘ NOTE
Be aware of the fuel level at which the heater fuel pick-up becomes uncovered to avoid unexpected stoppages in heater operation.
- → Take precautions so that the heater is not able to fully drain the vehicles primary fuel tank.

5.3 Heating with electricity

The coolant reservoir of the system is equipped with a 1,500 W (5,100 BTU/h) electric element wired in series with a thermostat switch and a standard 15-amp grounded plug.

The system provides an output for switching the electric element through a switched receptacle or similar device. This output (12 VDC) is activated when the electric heat source is selected and there is a heat demand on the system.

When in operation the in-series thermostat installed in the coolant reservoir will regulate the coolant temperature at a level lower than the operating temperature of the fuel burning coolant heater. As such when both the electric element and fuel burning coolant heater are activated together the electric element will not be active once the coolant becomes sufficiently heated.

The intended usage of the electric element is situations where the heating requirements are low and when access to an electric grid is available. It may not have sufficient capacity to maintain a comfortable room temperature in colder ambient temperatures or supply sufficient quantities of heated water. In such scenarios the higher capacity fuel burning heater should be utilized.

⚠ WARNING!
DO NOT OPERATE THE ELECTRIC ELEMENT WHILE THE HEATING ELEMENT OR THERMOSTAT IS EXPOSED TO AIR. RISK OF DAMAGE AND OVERHEATING.
- If the element is heated while exposed to the air its sheath can become over heated and burst.
- The thermostat is unable to regulate the electric element if both it and the element are not submerged in coolant.

→ Only operate the electric heating element when submerged in coolant.
→ Check the coolant level in the reservoir regularly and top up as required.

CAUTION!
DO NOT CONNECT THE ELECTRIC HEATING ELEMENT TO AN UNSWITCHED RECEPTACLE.
- Doing so will result in the element being energized whenever 120 VAC is available, increasing the chances of unintentional activation and potential damage.

NOTE
- Consult the system installer for additional detail on the 120 VAC switching device being used.
- The 120V switching device is not supplied by Eberspaecher.

5.4 Hydronic S3 configuration for Hydronic AquaSystem

The Hydronic S3 coolant heater has internal parameters that can be tailored to specific applications. In many instances these parameters do not need to be adjusted. This section describes how to perform this configuration if it is required.

NOTE
- Hydronic S3 obtained as part of the listed kits (section 2.1.1) should arrive pre-configured (no additional configuration required).
- Hydronic S3 obtained as a replacement or outside of the listed installation kits will have to be configured using EasyScan to operate correctly as part of the Hydronic AquaSystem NA.

5.4.1 Connecting EasyScan

To connect the EasyScan the 4-pin connector (item 4, picture 15) on the EasyScan connection cable is plugged into the EasyScan connector on the Hydronic S3 harness (-XB12) after removing the EasyScan connection cap (-XS12). Refer to schematic in section 4.2.1.

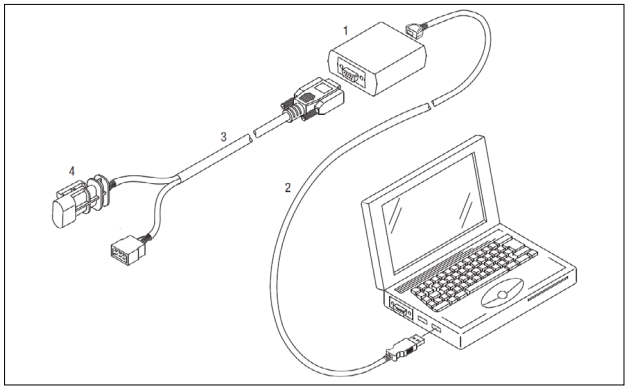

Picture 15
1 EasyScan VCI (Vehicle Communication Interface)
2 "PC" connection cable
3 "Diagnostic interface" connection cable
4 Connection to Hydronic S3 cable harness

NOTE
- Hydronic S3 must be powered in order to connect with EasyScan.
- EasyScan unit must be ordered separately (order no. 21.1500.89.0000).

5.4.2 Max runtime and coolant pump settings

Start the EasyScan program as described in the EasyScan operating instructions.

Complete the steps below with EasyScan to adjust the Hydronic S3's maximum runtime and the coolant pump control configuration.

NOTE
- Elevated login permissions may be required to access some functions (contact your Eberspaecher representative for details).
- The layout of EasyScan is dependent on the software version and may not be exactly as shown.
- Always use the latest software version. Available through the Partner Portal.

In the EasyScan menu column on the left choose **Select** to open the menu for selecting the connected heater model.



1 Select

Select the option for the heater being used.

- In the tree select **Water heater 3. Gen.** → **Diagnostics** → **HS3 ECO 12V CS**.
- All the sub boxes should be selected automatically. If not, at a minimum ensure **Coding** is selected.

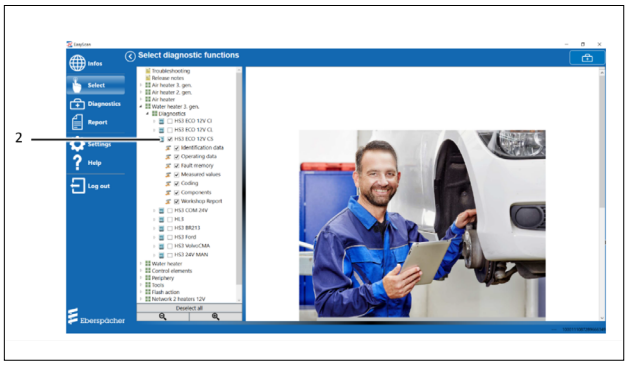

2 Select HS3 ECO 12V CS

Select the Coding tab and allow it to load.

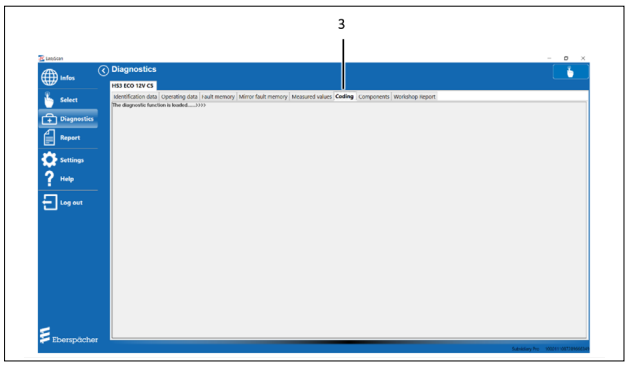

3 Coding

To set the maximum runtime value:

- In the **Application parameter** tab open the **Other** dropdown.
- Set the running period limit to **65535** (In some heater versions this may already be set).
- Click the **Write coding** button to set the value in the heater.

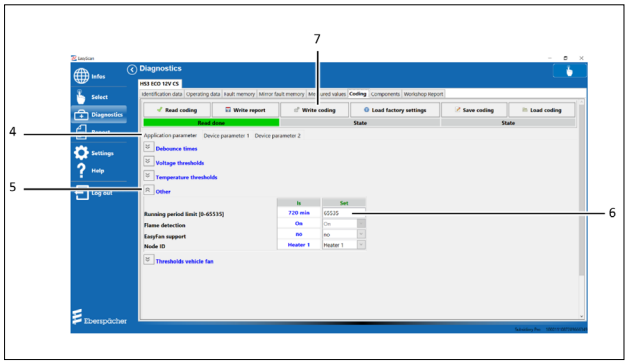

4 Application parameter
5 Other dropdown
6 Enter 65535
7 Write coding

If successful "**Executed write**" will be displayed and the **Running period limit** value under the **Is** column will be "**65535 min**".

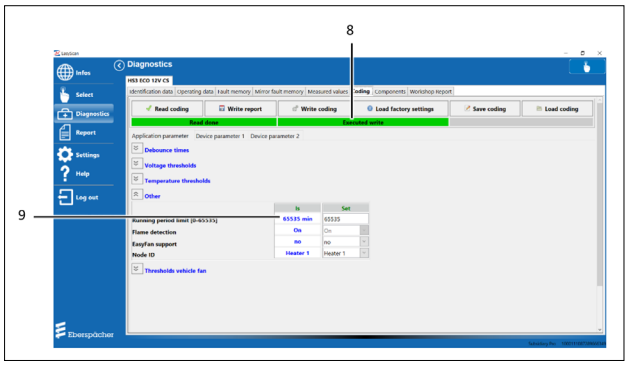

8 "Executed write" displayed
9 "65535 min" displayed

To set the coolant pump configuration:

- Select the **Device parameters 2** tab
- Set the **Installation state Water pump** value in the Set column to "no water pump installed" (default value is "Pierburg water pump WUP 3L")
- Click the **Write coding** button to set the value in the heater.

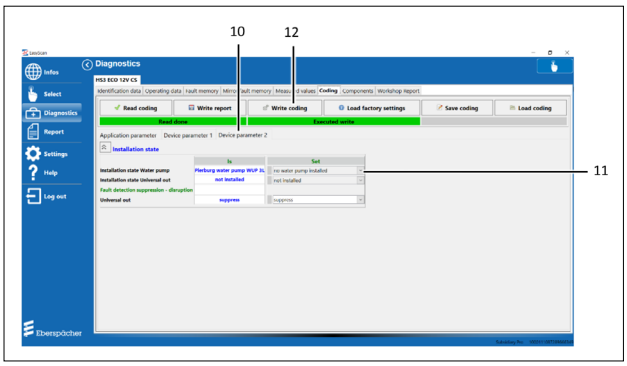

10 Device parameter 2
11 Select "no water pump installed"
12 Write coding

If successful "Executed write" will be displayed and the **Installation state Water pump** value under the **Is** column will be "**no water pump installed**".

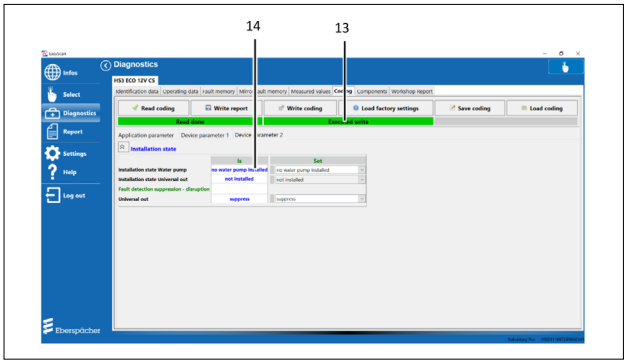

13 "Executed write" displayed
14 "no water pump installed" displayed

5.5 Initial commissioning of the system

5.5.1 Filling up with coolant and purging air

WARNING!
DO NOT ACTIVATE THE SYSTEM UNTIL THE COOLANT CIRCUIT HAS BEEN FILLED AND PURGED OF AIR.

- Doing so may result in damage to system components.
- System will not heat air or water with an empty coolant circuit.

→ Fill the coolant circuit with the appropriate coolant mixture. See section 3.8.3.

→ Purge all air from the coolant circuit. See section 3.8.4.

Before activating the system ensure it has been filled with the appropriate coolant mixture.

NOTE
After activating the system for the first time after filling allow the coolant to reach and maintain its operating temperature for 30 minutes. Check the coolant level and adjust if necessary.

5.5.2 Priming fuel lines

⚠ DANGER!
RISK OF FIRE, EXPLOSION, POISONING AND INJURY!
DO NOT OVER PRIME THE FUEL SYSTEM.

- Over priming can result in a dangerous buildup of fuel within the Hydronic S3, the exhaust system, or under the vehicle.

→ Only prime the system for the minimum amount of time required to fill the fuel lines.

→ Observe the movement of fuel through the clear fuel lines during priming and stop priming as soon as the fuel reaches the Hydronic S3.

→ Monitor the system for fuel leaks.

ⓘ NOTE

- Ensure that there is sufficient fuel in the fuel tank to cover the fuel pick-up point.
- An over primed fuel system may produce excessive white smoke once the Hydronic S3 starts. Smoke will continue to be produced until all excess fuel has evaporated or been burned away.

When the system is first installed the fuel lines will have to be filled with fuel (primed). This can be done using one of 2 methods.

Method 1
Use the fuel line priming function built into the AquaSystem controller. Refer to the Hydronic AquaSystem operating instructions for how to access and utilize this feature.

Method 2
Activate the Hydronic S3 by turning on heating with the diesel / gasoline heat source selected. During the Hydronic S3's start-up cycle the fuel pump will activate and begin drawing fuel into the lines. It may take multiple start attempts to fully prime the fuel lines.

ⓘ NOTE

- An unsuccessful Hydronic S3 start attempt caused by fuel lines not being primed is one of the conditions that can generate an error (Fault code: P00012A – Unsuccessful start procedure / Fault class 4: Fuel supply or Pump). At first this fault will not stop the user from attempting to restart.
- Too many of these errors in a row will cause the Hydronic S3 to go into a safety lock out (Fault code: P00012B - Operation inhibit, too many unsuccessful start procedures / Fault class 1: Service). If this error occurs the fault will have to be cleared before the heater can be restarted. See the Hydronic AquaSystem operating instructions for how to do this through the touchscreen. Faults can also be cleared using the EasyScan diagnostics tool.

5.5.3 Preparing for water heating

⚠ DANGER!
SCALDING BY HOT WATER!
MAXIMUM WATER TEMPERATURE MUST BE SET PRIOR TO SYSTEM BEING PUT INTO SERVICE.

→ Thermostatic mixing valve must be adjusted to an appropriate maximum water temperature. See section 3.6.

→ Take precaution and use protective equipment to not get burned while setting the water temperature.

Activate water heating with the diesel / gasoline heat source selected and allow the system to heat up to operating temperature. Carefully open only the hot water on the first fixture and adjust the flow rate to maximize the water temperature. Monitor the maximum water temperature. If the water temperature is above 52°C (125°F) the thermostatic mixing valve must be adjusted and this procedure must be repeated.

The above procedure must be repeated for every fixture supplying hot water connected to the system.

ⓘ NOTE
The vehicle's fresh water system must contain sufficient water and all of the lines must be purged before hot water can be delivered. Refer to the vehicle / water system specific instructions.

5.5.4 Functional component checks

ⓘ NOTE
Refer to Hydronic AquaSystem operating instructions for details regarding the activation and monitoring of system states and temperatures.

Coolant pump
The activation of any heating function will cause the coolant pump to activate. The pump should produce an audible sound and the movement of coolant should be observed within the coolant tank.

Hydronic S3
The Hydronic S3 can be activated by selecting it as the sole heat source and activating the water heating function. The Hydronic S3 will start and the coolant temperature should be observed to increase.

Once the target system operating temperature is reached the Hydronic S3 will start to reduce its heat output. When the system's maximum temperature is reached it will switch to "paused" mode and stop combustion (it will re-activate once coolant temperature drops sufficiently).

ⓘ NOTE

- Air heating should not be activated for this check as it will slow the rate of coolant temperature rise.

- If an overheating condition is reported the coolant circuit needs to be purge of air or investigated to improve the coolant flow rate through the heater to avoid overheating.

Air heat exchangers

The correct wiring of each Silencio 2 unit can be verified by confirming response matches the table below while air heating is active.

Fan speed setting	Silencio 2 response
High	2 fans at High speed
Medium	2 fans at Low speed
Low	1 fan at Low speed

Electric heating

NOTE

- The system must be connected to 120 VAC power to activate electric heating.
- Consult the documentation of the 120 VAC switching device being used to verify its functionality.

The electric heating output can be activated by selecting electric heating as the sole heat source and activating the water heating function. The designated output should be activated and used to trigger the switching device to provide power to the heating element. The coolant temperature will be observed to rise.

Once the maximum electric heating system temperature is reached the electric heating will turn off (it will activate again when coolant temperature drops sufficiently).

5.6 User interface basic operation

NOTE

- Contained here is a subset of the full Hydronic AquaSystem NA operating instructions covering only the most basic controller functions.
- Please review the Hydronic AquaSystem operating instructions for full detailed operating instructions and descriptions of all features and functions available to the user.

5.6.1 Main screen

The system is controlled from the touch screen user interface (picture 16).

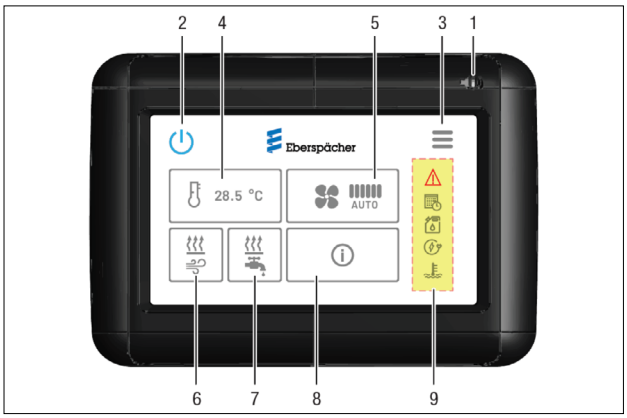

Picture 16

1 **Power indicator**
Red LED flashes when the touchscreen display is powered.

2 **System activation button**
Turn heating system ON / OFF.

3 **Menu button**
Access additional functions and settings.

4 **Air temperature setting**
Displays the current air temperature set point.
Press to change interior air temperature setpoint.

5 **Fan speed settings**
Displays current fan setting (LOW, MED, HIGH, AUTO) and current fan speed (bars). Press to change fan speed setting.

6 **Air heating button**
Activate / deactivate air heating.

7 **Water heating button**
Active / deactivate water heating.

8 **System info button**
Access additional system status information.

9 **System status indicators**
Display system status at a glance

5.6.2 Menu navigation

The settings menu screens can be accessed from the main screen and provide additional options and information to the user.

Menu navigation symbols	Description
☰	Settings menu screen
⌂	Main screen
← →	Next / previous menu screen
↑	Back to previous menu level

5.6.3 Activating the system

The heating system is turned ON and OFF from the main screen

The system must be ON in order to enable heating and diagnostic functions. Some menus and settings can be accessed with the system OFF.

System button state	Description
	System is OFF
	System is ON

WARNING!
DO NOT REMOVE POWER WHILE THE SYSTEM IS ACTIVE.
Removing electrical power from any part of the system may not allow for the necessary cooldown cycle to occur. This can result in overheating and boiling of the coolant which can overflow and cause scalding injuries.
→ Always switch the system off from the user interface.
→ Do not remove power until the system is OFF and any required cooldown cycles have completely finished.

5.6.4 Heat source selection

To select which heat sources are to be used:

- Access **General Menu** by selecting the menu button (Item 3, Picture 16).
- Select **Heat Source**
- Activate / deactivate the desired heat source.

The selected heat sources will be highlighted.

When a heat source is selected the relevant icon (and /or) will be illuminated in the indicator column on the main screen (Item 9, Picture 16).

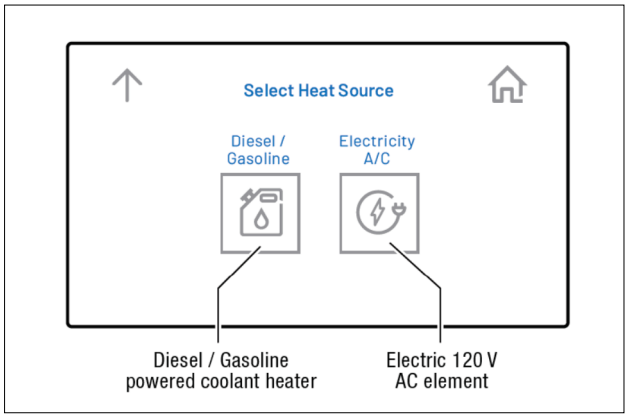

Picture 17

5.6.5 Air heating

Activation / Deactivation

Air heating is activated from the main screen. Pressing the air heating button (Item 6, Picture 16) will activate or deactivate air heating.

Air heating button state	Description
	Air heating is OFF
	Air heating is ON
	Air heating is not available (system is OFF)

Temperature setpoint

The current air temperature set point is displayed on the button on the main screen (Item 4, Picture 16).

Press the button to access the setpoint adjustment page.

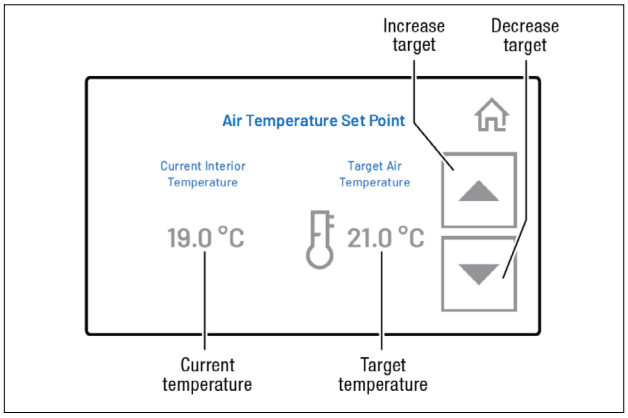

Picture 18

Fan Speed

The current fan speed settings are displayed on the main screen (Item 5, Picture 16). The text on the button indicates the current fan setting. The setting is distinct from the fan operating state. The fan operating state is indicated by the bar graph on the button.

Press the button to cycle through fan speed settings. Fan state will change based on fan setting and current system conditions.

Fan operating state	Description
	OFF
	LOW
	MEDIUM
	HIGH

5.6.6 Water heating

Water heating is activated from the main screen. Pressing the water heating button (Item 7, Picture 16) will activate or deactivate water heating.

Water heating button state	Description
	Air heating is OFF
	Air heating is ON
	Air heating is not available (system is OFF)

5.6.7 Hydronic S3 fault codes

If an HS3 fault is present the fault icon (⚠) will be illuminated in the indicator column on the main screen (Item 9, Picture 16).

Fault Class Descriptions

Access the **System Information** screen by pressing the **Info** button on the main screen (Item 8, Picture 16).

A high-level description (fault class) will be one of the messages cycling though under the **HS3 Coolant Heater Status** heading on the **System Information** screen.

Diagnostic Trouble Code

Detailed diagnostic trouble codes (DTCs) are stored in the Hydronic S3's memory.

To read the DTCs first select the **Menu** icon (☰) on the main screen (Item 3, Picture 16). Select the next menu page (→) on the **General Menu** screen. On the **HS3 Coolant Menu screen** select **Fault Codes**. On the fault codes screen select **Read Fault Codes**.

The DTCs and their status (Active/Stored) will be displayed. Refer to the Hydronic S3 repair instructions for detailed descriptions of the fault codes and recommended remedial actions.

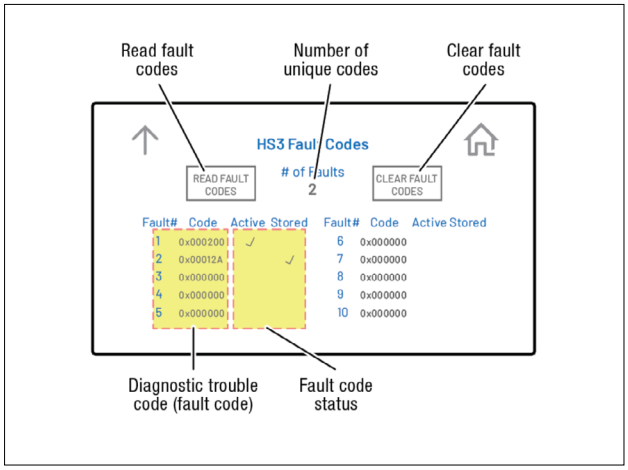

Picture 19

5.6.8 Additional functions and details

Other controller functions and detailed description of these functions are available in the Hydronic AquaSystem operating instructions. Some of the additional controller function available include:

- Additional menu / setting screens
- System status indicators
- System info at a glance
- Scheduled air heating
- Air heating options
- Water heating options
- Temperature sensor offset
- Units, time, date, and display settings
- Clearing Hydronic S3 fault codes
- Hydronic S3 operating counters
- Priming fuel lines
- System software details.

5.7 Operation at higher altitudes

Combustion within the fuel operated coolant heater (Hydronic S3) is affected by the lower air pressure when operating at higher altitudes. To compensate for this the system reads the ambient air pressure and then adjusts the combustion process accordingly.

Automatic altitude compensation is available up to 3,000 m (9,800 ft).

5.8 Winterization

CAUTION!

Failure to prepare the system when there is a risk of freezing can result in damage to the heating system.

- The exact measures needed to adequately protect the system are vehicle and installation dependent.

→ Consult with your vehicle instructions or contact your installer for details.

If the system is going to remain unused or stored in a freezing environment you must follow the winterization instruction for the fresh water plumbing system of your vehicle.

The only components of the heating system within the scope of supply which interact directly with fresh water are the plate heat exchanger and the thermostatic mixing valve. In the absence of any other winterization instruction these components must either be completely drained of fresh water or filled with a medium that will not freeze (be sure to flush them appropriately before the next use).

Disconnect the system from any electric power source for long term storage (e.g. remove fuse, switch off breaker, etc.)

NOTE

- Do not drain the heating system fluid (coolant) during winterization.
- The air heating function of the system can still be used while the vehicle's plumbing system is "winterized".

5.9 Safety test after lengthy stoppage

After a lengthy stoppage (e.g. summer months, storage, etc.), check all components are secure (tighten screws where necessary).

Carry out a visual check of the fuel and coolant systems for leaks.

5.10 Disconnecting power

Before disconnecting electrical power from the system ensure that the system is not in operation. Confirm that the Hydronic S3 coolant heater is not running (cool-down completed) and the system is off or in standby.

It is not permitted to use the removal of electrical power from the system as a means of switching off operation. Doing so will immediately stop all components and prevent the system from completing its prescribed cooldown cycle which can cause damage to the system.

⚠ WARNING!

DO NOT TURN OFF POWER TO THE SYSTEM WHILE IT IS IN OPERATION! RISK OF INJURY.

Removing electrical power from any part of the system may not allow for the necessary cooldown cycle to occur. This can result in overheating and boiling of the coolant which can overflow and cause scalding injuries.

- Stopping circulation of the coolant through the fuel operate heater (Hydronic S3) while it is in operation can cause the coolant to be overheated.
- Overheated coolant can boil and overflow the coolant system.
- Hot overflowing coolant may harm people, animals, or equipment.

→ Never disconnect power from the system or heater while it is in operation.

→ Do not deactivate any control device while the system is in operation.

→ Ensure that the Hydronic S3 has completed its cooldown cycle and the system is inactive before removing power.

5.11 Control and safety devices

- The heating system coolant circuit is not pressurized. In the event of an overheating condition pressure will be relieved via the overflow port on the coolant tank filler neck.
- Outputs of the controller (e.g. power to the coolant pump and the fans) are protected from short circuits and will switch off in the event of a short. They will then periodically attempt to switch back on until the short is removed.
- The controller will detect an open circuit condition if the output has <200mA across it when activated.
- If the fuel operated coolant heater does not ignite (within 105 seconds for gasoline, 70 seconds for diesel), the start sequence is repeated. If the heater does not ignite within the specified safety time (240 seconds), a safety shut-down occurs. After an unacceptable number of failed starts attempts, the Hydronic S3's ECU locks*.
- If the Hydronic S3's flame goes out by itself during operation, the heater will attempt to restart. If the heater does not ignite or ignites but goes out again within 10 minutes, a safety shut-down occurs. The safety shut-down can be cancelled by briefly switching heating off and on again.
- In the event of overheating (e.g. lack of coolant, poor heat rejection) the overheating sensor triggers. The fuel supply is interrupted and a safety shut-down occurs. Once the cause of the overheating has been eliminated (coolant temperature < 70°C/ 158°F) , the heater can be restarted. After 10 shutdowns due to overheating the Hydronic S3 ECU locks*.
- If the lower or upper voltage limit is reached, the Hydronic S3 shuts down automatically. The system however may remain ON.
- The Hydronic S3 does not start up if the glow plug is defective or if the electric cable to the metering pump is interrupted.
- The speed of the combustion fan motor is monitored continuously. If the fan motor does not start up, if it is blocked or if the speed falls below 40 % of the set speed, a safety shutdown occurs after 60 sec.

* Cancellation of the lock or reading out of the fault memory is possible:

- from Hydronic S3 Fault Code menu
- with EasyScan Diagnostic tool.

ⓘ NOTE

Do not switch unit on/off more than twice if a fault continues to occur.

5.12 Emergency Stop – EMERGENCY OFF

If an emergency stop – EMERGENCY OFF – is necessary during operation, please complete the following steps:

- Switch the heater off at the control unit, or
- remove the fuse, or
- disconnect the heater from the battery.

6 Troubleshooting / Maintenance / Service

6.1 Troubleshooting

6.1.1 Hydronic S3 coolant heater

If a fault on the fuel operated coolant heater occurs first check the following:

If the heater does not start after being switched on:

- Switch the heater off and on again.

- If the heater still does not start, check whether:
  - Fuel in the tank?
  - The fuses are ok?
  - The electrical cables, connections, terminals, are ok?
  - Is the combustion air system or exhaust system blocked?

ⓘ NOTE

Always ensure that there is sufficient fuel in the tank and the pickup point is below the level of the fuel. The heater will generate a fault and eventually lock if operated without fuel.

Fault codes registered by the Hydronic S3 can be read using the Hydronic AquaSystem NA controller. See section 5.6.7. Consult the Hydronic S3 repair instruction document for a detailed description of the fault code.

6.1.2 Touchscreen

If screen is not turning on check the system fuses, electrical cables, and connectors.

If the screen is on a diagnostic LED is present on the top right corner of the screen bezel.

Blink codes:
- System OK – 1 Hz (1x/sec).
- Start-up / Shutdown – constantly on.
- System crash – not blinking (System will restart after 60 seconds in this condition).

6.1.3 Input/output controller

If an output is not functioning correctly consult the blinking diagnostic codes on the I/O controller module.

Blink codes:
LED #1 (red):
- 1Hz (1x/sec) – System is OK.
- 2Hz (2x/sec) – No communication with touch screen.
- 5Hz (5x/sec) – Software error.
- Steady ON – Output shorted or overloaded.
- Steady Off – Open circuit logged.

LED #2 (green):
Output number in the event of a short or open circuit. If there are multiple output with issues only the first is shown. Number of blinks indicates output number; long blinks indicate multiples of ten.

6.1.4 Additional troubleshooting support

If after checking the items described above, issues persist, please contact:
- For factory installations: your contract workshop / garage.
- For subsequent installations: the workshop / garage that installed the heater.

Repairs are to be conducted by Eberspaecher trained personnel.

NOTE
Please note that guarantee claims can expire if the heater is modified by a third party or if non-original parts are installed.

6.2 Maintenance

WARNING!
RISK OF INJURY, SCALDING AND BURNS.
- The high temperatures of the coolant liquid and the coolant liquid circuit components can cause injuries, scalds and burns.

→ Before working on the coolant liquid circuit, wait until all components have cooled, wear safety gloves if necessary. Do not deactivate any control device while the system is in operation.

Check coolant level and concentration regularly and adjust as required. Replace coolant according to manufacturer recommendations.

After extended periods without operation, before heat is needed, perform a trial run with the heater. If thick, persistent smoke develops, unusual burning noises, a clear fuel smell occurs, or if electric / electronic components overheat the heater must be switched off and put out of service by removing the fuse. In this case, the heater should not be started up again until it has been tested by qualified staff who have been trained on Eberspaecher products.

NOTE
Check the openings of the combustion air supply and exhaust system as well as the blower intakes and outlets after longer periods without operation, clean if necessary!

6.3 Service

Technical support
If you have any technical questions or problems with the heater, the control unit or the operating software, you can contact the following service address: help@eberspaecher.com.

7 Environment

7.1 Certification

The high quality of the Eberspaecher products is the key to our success. To guarantee this quality, we have organized all work processes in the company along the lines of quality management (QM). Even so, we still pursue a large number of activities for continuous improvement of product quality in order to keep pace with the similarly constantly growing requirements made by our customers.

All the steps necessary for quality assurance are stipulated in international standards. This quality is to be considered in a total sense. It concerns products, processes and customer – supplier relationships. Officially approved public experts assess the system and the corresponding certification company awards a certificate.

Eberspaecher has qualified for the following standards:
Quality management in accordance with
ISO TS 9001:2015 and IATF 16949:2016
Environmental management system in accordance with
ISO 14001:2015

7.2 Disposal

Disposal of materials and reuse of recoverable materials
End-of-life devices and their components, defective components and packaging material can all be separated into their constituent materials so that all parts can be disposed of as in an environment-friendly manner or recycled where applicable.

Environmentally-friendly disposal includes the possible separation of materials so that recoverable materials can be reused. Ensure that end-of-life devices and their components are disposed of properly and are recycled.

NOTE
Waste products such as used fuel-carrying components and similar wearing parts can harm the environment as well as people and animals and should therefore be disposed of properly. Contact your local recycling company or your specialist dealer to find out how waste products are to be disposed of properly.

Eberspaecher Climate Control Systems Canada Inc.
6099 Vipond Drive
Mississauga, Ontario L5T 2B2
Canada

info-na@eberspaecher.com
www.eberspaecher-climate.com
(800) 387-4800

WEB EDITION EN 10.2023 Subject to change without notice © Eberspaecher Climate Control Systems Canada Inc.