CLIMATE CONTROL SOLUTIONS FROM EBERSPAECHER



August 2026

A WORLD OF COMFORT

Eberspächer


ES JE 178

QUICK-REFERENCE GUIDE



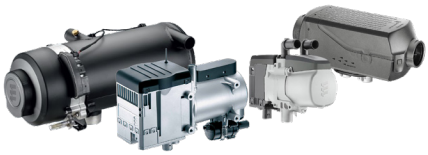

Eberspaecher heaters have become one of the most popular money saving products available in the heavy-duty truck market today. Typical savings using an Airtronic S3 can be as much as $6,000 per unit per year based on current fuel prices. Below you will find the most popular selling kit numbers for our air and coolant heater models.

For a detailed listing of our complete product line including heater kits, accessories and controllers for heavy truck, light truck, school bus, industrial and oil field markets please see the following pages.

All the heater products mentioned on the Quick-Reference pages are EPA Verified compliant for worry-free operation anywhere in the North America.

AIRTRONIC S3

DIESEL AIR HEATER / TRUCK BUNK HEATER

The Airtronic S3 puts out 7,500 BTU of clean comfortable heat and is ideal for bunk heating in all makes of heavy-duty trucks. It has a higher heat output than competitive models and is equipped with a standard fan-mode for times when air circulation is preferred instead of heating.

The most popular Airtronic S3 kit is listed below. It comes with everything needed for installation including: Heater, easy start pro controller, fuel delivery system, mounting hardware kit and all ducting.

Airtronic S3 – Install Kit with EasyStart Pro 20.2829.53.0201

Use of an engine pre-heater reduces cold start wear on internal components, reduces stress on the starting/cranking system, and can help extend DOC/DPF regen and replacement cycles by reducing cold-start white smoke.

HYDRONIC S3 ECONOMY (5kW)

PRE-HEATER SYSTEM

Eberspaecher, the leading system developer and supplier of vehicle heaters, has updated its product portfolio with the new generation of Hydronic S3 Economy (5kW) pre-heater.

Definition:
Hydronic: Water & Electronic, Product line, water heater
S3: Size and generation, Size (small) Generation 3
Economy: Marketing appendix, entry model

With the third generation of its Hydronic series, Eberspaecher is offering an easy-to-operate preheater with stepless heating power control. The coolant heater works efficiently with all popular types of fuel. Due to its robust construction – with an encapsulated fan motor and the separation of cold and hot components – it is designed for longevity. A high IP protection class also secures the unit from the ingress of water during high-pressure or steam jet cleaning. The new water spigots are fully rotatable by 360 degrees and are fully replaceable, they ensure convenient and rapid fitting in a range of installation positions. Optimized brackets enable the pre-heater to be mounted anywhere in the smallest possible space and to be attached rapidly and permanently.

The water heater impresses thanks to its compact dimensions and flexible installation options for simple retrofitting in a large number of vehicle models. As a ground-breaking all-in-one solution with comprehensive peripheral devices, it offers installation partners many practical advantages. With the EasyScan diagnostic tool, shop personnel can analyze the operating condition of the pre-heater easily and quickly.

HEATER INSTALLATION TIPS

For a time saving video showing a typical Class 8 truck installation for each of these products, please visit the Eberspaecher YouTube channel at https://www.youtube.com/@EberspaecherNorthAmerica

See your local dealer for pricing on purchases of the money-saving Eberspaecher heaters. Use link below to do a Dealer search
https://www.eberspaecher-climate.com/na/en/location/americas

QUICK-REFERENCE GUIDE

The basic principle of pre-heaters is to heat the passenger compartment of all kinds of vehicles without having to depend on the heat given off by a running engine. That's a well-known fact. But at some point or other you must have asked yourself what the actual difference is between air and water heaters.

Air-based pre-heater – Eberspächer Airtronic:
Air-based pre-heaters are mostly installed inside the cab and directly heat the air inside it, which is sucked in via the unit's own fan. Their effects are noticeable almost instantly, as the heat in the form of hot gas, which is produced by a burner, does not have to heat up a water circuit first. Modern devices are very quiet, low on emissions and chiefly used to maintain the temperature in the cab of a truck or van at a pleasant level even while it is at a standstill (e.g. overnight).

Water-based pre-heater – Eberspächer Hydronic:
Water-based pre-heaters have a compact design and can be fitted almost anywhere in the engine compartment. They are therefore the pre-heater of choice for cars with interiors too cramped for additional installations. The heat generated by a burner is transferred to the vehicle's coolant.

An (additional) electric circulation pump distributes the hot coolant, even when the engine is switched off. Then, the interior fan is activated automatically – everything works as it does in normal heater operation. Water-based heaters therefore not only warm up the interior but, depending on the application, also the engine or the water used in boats or motor homes. Engines heated in this way can be started more easily in cold weather while also protecting the car battery from the effects of the cold, and producing fewer harmful emissions on starting, as the hotter exhaust temperature enables the catalytic converter to reach its operating temperature more quickly. The cold-starting phase, which produces mechanical stress and higher emissions, is dramatically reduced, as the oil reaches operating temperature fast when the engine is started. This saves fuel and money while lowering CO2 emissions at the same time.

Both systems generally run on the vehicle's fuel, straight out of the fuel tank. Depending on the model, you can use a timer, remote control, smartphone app, etc. to control them.

QUICK-REFERENCE GUIDE

Hydronic S3 (5 kW):

Cab and engine heater


Passenger cars (from 2.0 l displacement)


Emergency vehicles


Vans, large taxis, minivans


Commercial vehicles, including tandem configurations with air heaters


Construction and agricultural machines


Motor homes

Hydronic M8 / M10 / M12 (8–12 kW):


Commercial vehicles from approx. 150 kW engine power


Cargo area heating


Military vehicles


Large agricultural and construction machines


Motor homes

Hydronic L3 (16 / L24 / L30 / L35 (16–35 kW):


Coaches and city buses


Large freight compartments for goods that need to be kept warm


Container setups


Diesel locomotives

QUICK REFERENCE GUIDE

Airtronic S3 (2.2 kW):
Heating comfort for a variety of applications.

- Vans, small motor homes, small buses
- Truck cabs with sleeping cabins
- Construction and agricultural machines without engine-dependent heating
- Forklifts and other plant machinery
- Electric vehicles

Airtronic L3 (6 kW):

- Vans, workshop vehicles, personnel carriers, small buses (fast heating despite door opening frequently)
- Ambulances and emergency medics' vehicles (special heating and temperature requirements)
- Freight compartment and freight goods heating plus frost protection and dew point prevention

Airtronic M3 (4 kW):
The high-performance, compact air heater for mid-range requirements.

- Large trucks – cabs with sleeping cabins
- Vans, small buses
- Large agricultural and construction machines
- Motor homes
- Minivans, and vehicles used for conferences and consultancy

Airtronic XL3 (8 kW):
Continuously variable, pre-selectable heating performance regulation.

- Large freight compartments, containers
- Personnel carriers
- Coaches and city buses

QUICK REFERENCE GUIDE

INTRODUCTION PAGE

On the following pages you will find the entire offering of Eberspaecher heaters, heater kits, control options and accessories. Below are some tips on how to best choose the products you are looking for.

PAGE LAYOUT

The Product Catalog is a complete listing of the products we sell. In the heater section, you can trace the heater you are considering straight across to the dots in the columns on the right side of the page. These columns have a header row showing the items offered with the blue squares indicating which of them actually come in the kit being selected.In the accessory section, you trace the accessory across to the blue squares on the far right to see what heaters that component is used with.

HEATER CHOICES

Our heaters come in both 12 and 24 Volt offerings and in Gasoline (B prefix) and Diesel (D prefix) models. When selecting a heater model, be sure to begin with the right voltage and fuel type for your application. The "Basic" heaters shown are just that, a bare heater, and are usually used as replacements. If a heater price seems too low, compared to other models, be sure it's not a basic kit.

- RECOMMENDED

  There are a variety of kits and components in the catalogue that may look similar.

  When more than one item is listed, look for the label. PREFERRED

  This indicates that item is one of the more commonly sold products of those that are listed. However, we want to make sure you get the right equipment for the job so if you are in doubt please don't hesitate to contact your local regional sales manager or our tech service department at (1-800-387-4800) or to seek assistance, log on to Eberspaecher Service World at https://service.eberspaecher.com/EN/service/ and create a service ticket using the "My Ticket Management" link.

- EMMISSIONS

  Eberspaecher offers more EPA Verified / CARB Compliant heater choices than any other manufacturer. Look for the EPA label when selecting a heater for specific applications.

- AIRTRONIC HEATER KITS

  Unless specified otherwise these kits are usually sold as complete with installation components. The variables are usually limited to multiple controller and fuel Pick-up choices. These are all noted in the kit description and in the columns on the right side of the page.

- HYDRONIC HEATER KITS

  Unless otherwise noted these units are typically sold ala-carte – with the heater kit, timer/controller and even installation kits purchased separately to provide maximum installation flexibility. Always check the description and the kit component listing in the columns on the right side of the page.

- CONTROLLERS

  Eberspaecher offers a variety of controllers for almost every heater model and application combination. The most preferred controller is the EasyStart PRO controller for both the air and coolant heaters. Other controller types like the EasyStart timer, the programmable (school bus) timers, mini controller and the multi-function switch are also available for use based on the application and customer requirements.



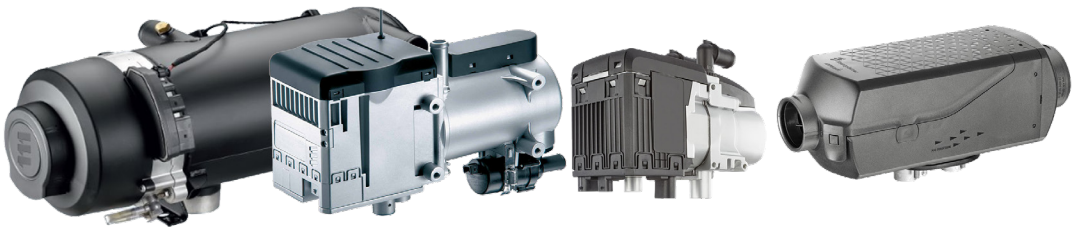

QUICK-REFERENCE GUIDE

FUEL PICK-UP / FMP OPTIONS:
Eberspaecher makes a number of fuel Pick-up and fuel pump mounting options to help streamline installations.Below you will find a summary of some of those choices.

- UNIVERSAL PICK-UP – Unless designated otherwise, Eberspaecher heater kits that show to have a fuel Pick-up tube come with our "Universal Pick-up." This offers the flexibility of a typical drill-the-tank installation or the ability for installation in an existing NPT port on the fuel tank (if available).

- NO PICK-UP – Kits marked "No Pick-up" do not have a fuel Pick-up tube. A variety of Pick-up tubes, including those for specialty use or to be used with NPT compression fittings, are located in the fuel section. Choosing the right fuel Pick-up can save time and provide a custom installation.

- VENT PICK-UP – Kits marked "Vent Pick-up" come with a fuel Pick-up tube made for installation using the trucks fuel system vent port.

SPECIALTY KITS:
Eberspaecher manufactures several specialty kits to provide the best heater life and maximum levels of reliability and safety for end-users.

- HIGH ALTITUDE

The latest generations, Airtronic 3, Airtronic 2, Hydronic S3 CS (24 Volts only) and Hydronic L3 heaters DO NOT NEED high altitude kits.

Eberspaecher provides other options from older units operating at higher altitudes where the air is thin and heaters tend to run rich.

SPARE PARTS:
For all spare parts information, please reference the heater's "Spare Parts Manual" at https://partner.eberspaecher.com/en

Not all parts which are listed in the parts manual are included in the respective heater kit part numbers provided in this product catalogue. Any additional parts not included in the heater kits provided in this product catalogue will have to be ordered separately (For example: Exhaust Muffler).

BOXED:
Kits marked "Boxed" means the heater comes installed in a rugged metal enclosure for protection and long-life. The box is usually frame rail mounted but can also be used in a variety of industrial or heavy equipment applications. Eberspaecher's large coolant heater models use a heavy-duty box and carries a direct replacement footprint for many legacy heaters in the field.

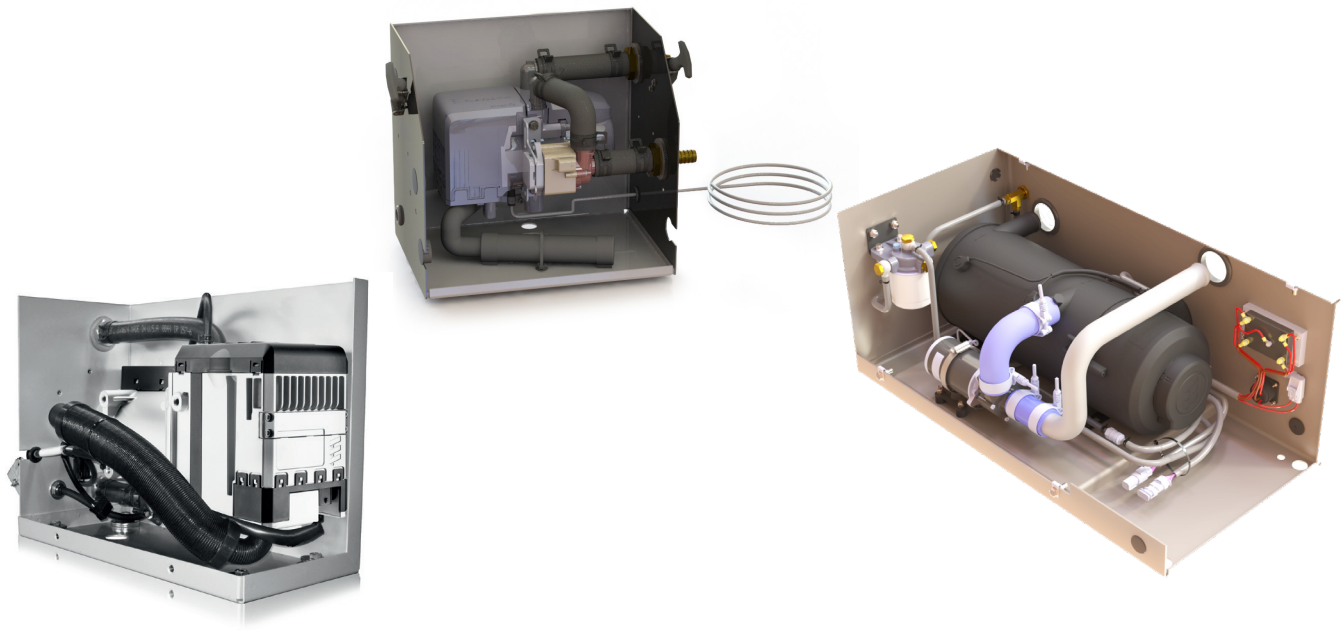

TABLE OF CONTENTS

1	INTRODUCTION TO THE HEATING SYSTEMS	
	Quick Reference Guide	3 - 8
	Table of Contents	9
2	AIR HEATERS	
	Product Information	10 - 13
	AIRTRONIC S3 / M3 and Accessories	14 - 15
	AIRTRONIC L3 / XL3, Cargo & Echo Kits	16 - 17
	Product Package for Airtronic S3, M3 and L3	18 - 19
3	COOLANT HEATERS	
	Product Information	20 - 25
	HYDRONIC HS3 CS	26
	HYDRONIC AQUA SYSTEM for RV's	27
	HYDRONIC M-II	28
	HYDRONIC M-II - Build Your Own Kit	29
	E-Guardian	30
	HYDRONIC L3 & Boxed kits	31 - 32
4	ACCESSORIES PARTS GUIDE	
	Control Options and Timers	33 - 38
	Temperature Sensors	39
	Diagnostics, Adapters and Special Tools	40 - 42
	Fuel System	43 - 49
	Mounting Parts	50 - 60
	Electrical Parts	61 - 68
	Power Converters 12V to 24V	69
	Exhaust	70 - 75
	Ducting Guide	76
	Air Conducting Parts	77 - 85
	Intake (Combustion Air)	86 - 87
	Coolant System	88
	Coolant Pumps	89 - 90
	Plumbing	91 - 95
	Optional Water Circuits on a Hydronic S3 Economy, Example	96 - 98
	Hydronic S3 Optional Add-ons FuelSupply	99
	Fuel System Guide	100
	Selecting the Air Heaters	101 - 102
	Ducting Rating Guide	103 - 105
	Guide Numbers	106 - 111
5	ELECTRIC HEATERS	
	Electric Heaters	112
	Handiwash	113
	THERMOLINE	114
	OFF HWY Heater Kits from UK (CAT & KOMATSU)	115

PRODUCT INFORMATION

AIRTRONIC: TECHNOLOGY

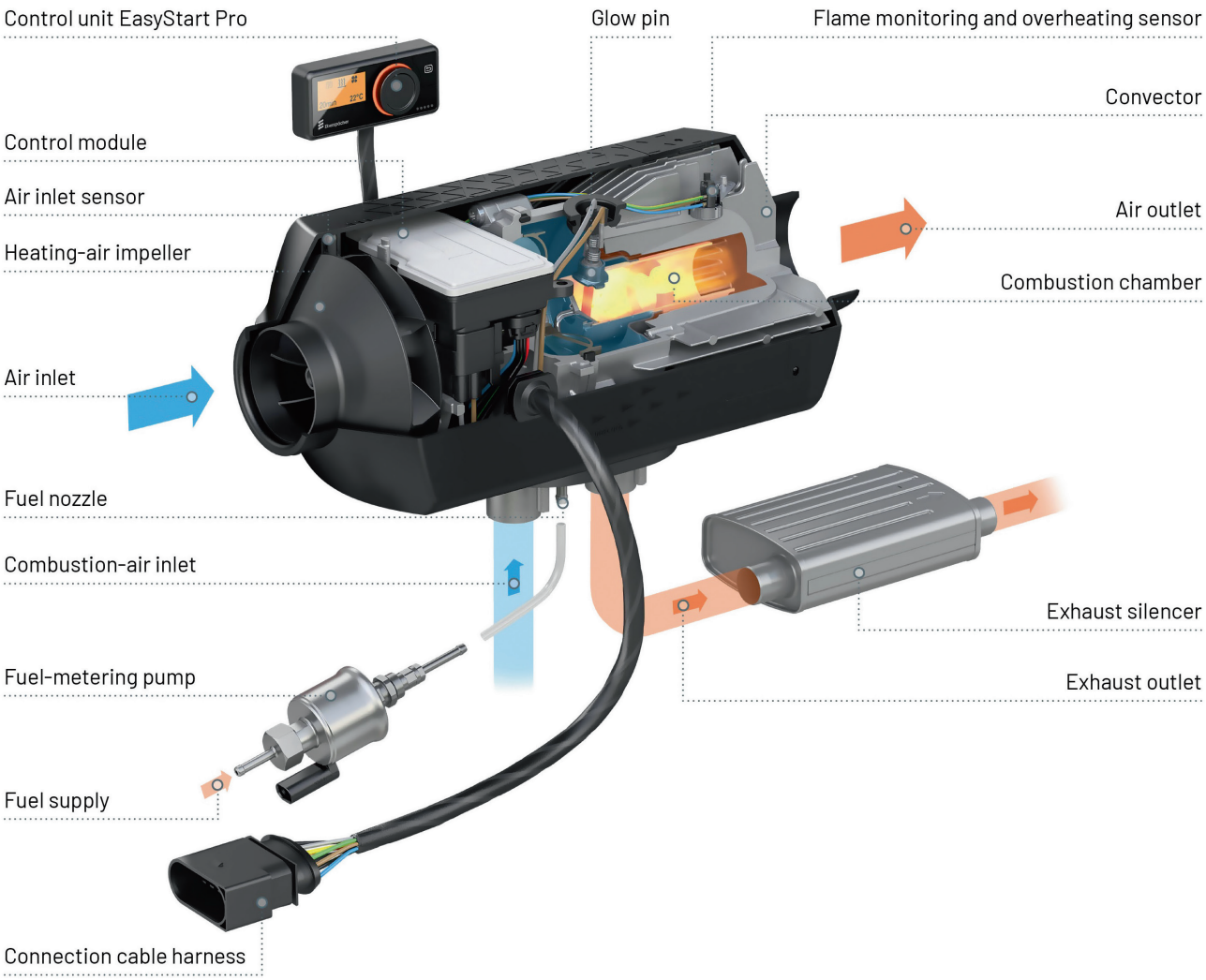

AIRTRONIC FUNCTIONS:

- Combustion air is conveyed to the combustion chamber by the fan motor and impeller.
- Fuel is drawn from the vehicle's tank.
- Fuel is delivered to the combustion chamber by the metering pump.
- The glow element (filament glow plug from 5 kW) vaporizes this fuel as it enters the combustion chamber and creates a combustible fuel-air mix with the combustion air.
- The resulting flame formation switches off the glow element (or filament glow plug), transfers the heat to the heating air via the convector, and diverts exhaust gas via the exhaust silencer.
- The fan motor and heating-air impeller convey cool air to the heater, where it is warmed by the convector and then blown into the vehicle interior.

PRODUCT INFORMATION

The heating output information provided refers to heating the interior of a cold vehicle to around 68 °F or 20 °C in cold outside temperatures. If the heater only needs to maintain the existing temperature of the interior, less heating power is required. The heating outputs are only guide values. The exact heating requirement also depends on other environmental conditions (e.g. wind, materials, cabin walls, heating-air ducting, etc.).

GUIDE VALUES FOR REQUIRED HEATING OUTPUT		Outside temperature		
Example	Volume of interior	< -15 °C	-15 °C to 0 °C	> 0 °C
Truck cabin	< 8 m³	4 kW	3 kW (2 kW)*	2 kW
Small bus	8 – 12 m³	5 kW (4 kW)*	4 kW (3 kW)*	2 kW
Motor home / van	12 – 20 m³	8 kW	6 kW (5 kW)*	4 kW

* Values (referring to heat-insulated cabins / vehicles)

Selecting the device and the respective advantages:

- Airtronic S3 Commercial: the smallest air heater on the market, advantageous in cramped installation spaces. Air ducting with 60 mm or 75 mm air hoses possible. Performance 2,200 Watt (Gasoline 2,000 Watt).
- Airtronic M3 Commercial: output 4,000 W, air ducting with 75 mm or 90 mm air hoses possible, for vans and suitably sized trucks; offers the advantage of high power within a reasonable installation space, wide range of applications from 1,050 W (gasoline 1,300 W) to 4,000 W.
- Airtronic M3 Recreational: for applications requiring a higher air throughput, e.g. for long, complex heating-air ducting in campers/motor homes, boats or ambulances. Performance 4,000 Watt

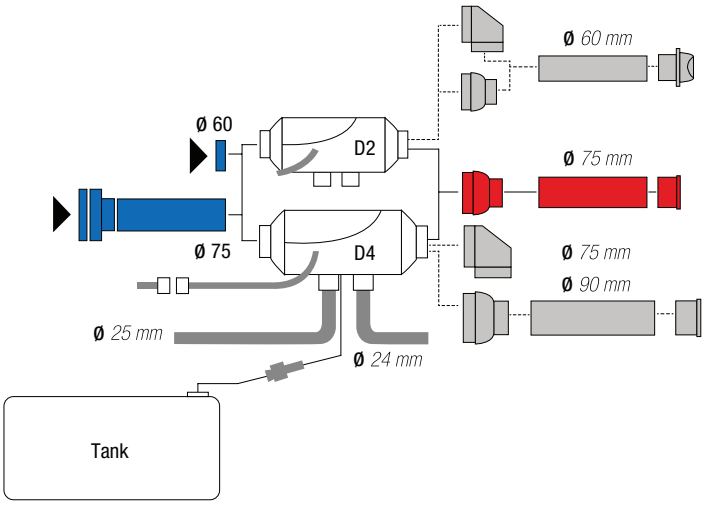

PRODUCT INFORMATION

EBERSPÄCHER AIRTRONIC





Heater		Airtronic S3 Commercial		
Product Package		Heater, metering pump		
Techn. designation		Airtronic S3 D2L - 12V	Airtronic S3 D2L - 24V	Airtronic S3 B2L - 12V
Order no. for heater		25.2953.05.0000	25.2954.05.0000	20.2029.05.0000
Fuel - commercially available (DIN EN 590)	Diesel	Diesel	Gasoline	
Voltage	V	12	24	12
Heating medium		Air		
Heat settings - Controls		Off / minimum / maximum - Stepless		
Heating Perfomance	W	850 - 2,200		1,000 - 2,000
Heating Perfomance	BTU/hr	2900 - 7510		3400 - 6820
Fuel consumption	l/h	- / 0.1 / 0.27		- / 0.14 / 0.26
Fuel consumption	gal/hr	- / 0.03 / 0.07		- / 0.04 / 0.07
Elec. power consumption, operation	W	4 / 6 / 27	7 / 9 / 28	4 / 11 / 26
Elec. power consumption, start	W	≤ 80	≤ 90	≤ 80
Air throughput w/o backpressure	kg/h	20/50/105		20/65/100
Lower voltage limit	V	10.5	21	10.5
Upper voltage limit	V	16	32	16
Interference suppression		Interference suppression class 5 (DIN EN 55025)		
Dimensions L x W x H	mm	310 x 115 x 122		
Weight Kg or (lbs)		Approx. 2.5		
Ventilation mode		Available		

EBERSPÄCHER AIRTRONIC





Heater		Airtronic M3 Commercial		
Product Package		Heater, metering pump		
Techn. designation		Airtronic D4L - 12V	Airtronic D4L - 24V	Airtronic B4L - 12V
Order no. for heater		25.2955.05.0000	25.2956.05.0000	20.2030.05.0000
Fuel - commercially available (DIN EN 590)		Diesel		Gasoline
Voltage	V	12	24	12
Heating medium		Air		
Control/heat settings		Off/stepless: min.-max.		
Heating Perfomance	W	-/ 1,050 / 4,000		-/ 1,300 / 4,000
Heating Perfomance	BTU/hr	- / 3583 / 13649		- / 4436 / 13649
Fuel consumption	l/h	- / 0.12 / 0.49		-/ 0.17 / 0.55
Fuel consumption	gal/hr	- / 0.03 / 0.12		- / 0.04 / 0.15
Elec. power consumption, operation	W	4 / 6 / 37	7 / 9 / 39	4 / 8 / 38
Elec. power consumption, start	W	≤ 105	≤ 100	≤ 105
Air throughput w/o backpressure	kg/h	35 / 40 / 185		24 / 85 / 180
Lower voltage limit	V	Approx. 10.5	Approx. 21	Approx. 10.5
Upper voltage limit	V	Approx. 16	Approx. 32	Approx. 16
Interference suppression		Interference suppression class 5 (DIN EN 55025)		
Dimensions L x W x H	mm	376 x 140 x 150		
Weight empty	Kg	4.5		
Ventilation mode		Available		

PRODUCT INFORMATION

EBERSPÄCHER AIRTRONIC



Heater		Airtronic M3 Recreational		
Product Package		Heater, metering pump		
Techn. designation		Airtronic D4R - 12V	Airtronic D4R - 24V	Airtronic B4R - 12V
Order no. for heater		25.2957.05.0000	25.2958.05.0000	20.2031.05.0000
Fuel commercially available(DIN EN 590)		Diesel		Gasoline
Voltage	V	12	24	12
Heating medium		Air		
Control/heat settings		Off/stepless: min.-max.		
Heating Perfomance	W	-/ 1,050 / 4,000		-/ 1,300 / 4,000
Heating Performance	BTU/hr	- / 3583 / 13649		- / 4436 / 13649
Fuel consumption	l/h	-/ 0.12 / 0.49		-/ 0.17 / 0.55
Fuel consumption	gal/hr	- / 0.03 / 0.12		- / 0.04 / 0.15
Elec. power consumption, operation	W	5 / 7 / 53	8 / 10 / 55	5 / 10 / 54
Elec. power consumption, start	W	≤ 105	≤ 90	≤ 110
Air throughput w/o backpressure	kg/h	37 / 45 / 190		37 / 85 / 190
Lower voltage limit	V	Approx. 10.5	Approx. 21	Approx. 10.5
Upper voltage limit	V	Approx. 16	Approx. 32	Approx. 16
Interference suppression		Interference suppression class 5 (DIN EN 55025)		
Dimensions L x W x H	mm	376 x 140 x 150		
Weight empty	Kg	Approx. 2.5		
Ventilation mode		Available		

EBERSPÄCHER AIRTRONIC





Heater		Airtronic L3		Airtornic XL3
Product Package		Heater, metering pump		
Techn. designation		Airtronic L3 D6L - 12V	Airtronic L3 D6L - 24V	Airtronic XL3 D8L - 24V
Order no. for heater		25.2959.05.0000	25.2960.05.0000	25.3020.05.0000
Fuel - commercially available(DIN EN 590)		Diesel		
Voltage	V	12	24	
Heating medium		Air		
Control/heat settings		Off/stepless: min.-max.		
Heating Perfomance	W	-/ 1,500 / 6,000		-/ 2,000 / 7,600
Heating Performance	BTU/hr	- / 5118 / 20473		- / 6824 / 25932
Fuel consumption	l/h	-/ 0.16 / 0.74		-/ 0.23 / 1.01
Fuel comsumption	gal/hr	- / 0.04 / 0.20		- / 0.06 / 0.27
Elec. power consumption, operation	W	7 / 90	11 / 95	8 / 130
Elec. power consumption, start	W	≤ 90	≤ 85	≤ 90
Air throughput w/o backpressure	kg/h	60 / 80 / 285		60 / 120 / 300
Lower voltage limit	V	Approx. 10.5		Approx. 21.4
Upper voltage limit	V	Approx. 16		Approx. 32
Interference suppression		Interference suppression class 5 (DIN EN 55025)		
Dimensions L x W x H	mm	438 x 160 x 170		493 x 160 x 170
Weight empty	Kg	Approx. 7		Approx 8.5
Ventilation mode		Available		

AIRTRONIC S3/M3
DIESEL AIR HEATER - 7,500 BTU / 13,600 BTU

		Heater	Harness	Fuel System	Ducting	Mounting Bracket	Control Options / Timers	Fuel Pick-up Pipe	Hardware Kit	Exhaust Pipe	Intake Pipe	Portal Instructions
AIRTRONIC S3/M3												
S3 D2L 12V Commercial with fuel pump - No installation parts	25.2953.05.0000	■										■
S3 D2L 24V Commercial with fuel pump - No installation parts	25.2954.05.0000	■										■
M3 D4L 12V Commercial with fuel pump - No installation parts	25.2955.05.0000	■										■
M3 D4L 24V Commercial with fuel pump - No installation parts	25.2956.05.0000	■										■
M3 D4R 12V Recreational with fuel pump - No installation parts	25.2957.05.0000	■										■
M3 D4R 24V Recreational with fuel pump - No installation parts	25.2958.05.0000	■										■
HEATER WITH INSTALLATION KIT												
Install Kit - Airtronic S3 D2L 12V	20.2829.53.0200	■	■	■	■	■			■	■	■	■
Install Kit - Air S3 D2L 12V w/ EPRO P/U **PREFERRED**	20.2829.53.0201	■	■	■	■	■	■	■	■	■	■	■
Install Kit - Airtronic S3 D2L 24V	20.2829.54.0200	■	■	■	■	■			■	■	■	■
Install Kit - Airtronic M3 D4L 12V	20.2829.55.0400	■	■	■	■	■			■	■	■	■
Install Kit - Air M3 D4L 12V w/ EPRO P/U **PREFERRED**	20.2829.55.0402	■	■	■	■	■	■	■	■	■	■	■
Install Kit - Airtronic M3 D4L 24V	20.2829.56.0400	■	■	■	■	■			■	■	■	■
Install Kit - Airtronic M3 D4R 12V	20.2829.57.0400	■	■	■		■			■	■	■	■
Install Kit - Airtronic M3 D4R 24V	20.2829.58.0400	■	■	■		■			■	■	■	■

AIRTRONIC S3/M3
GASOLINE AIR HEATER - 7,500 BTU /13,600 BTU

		Heater	Harness	Fuel System	Ducting	Mounting Bracket	Control Options / Timers	Fuel Pick-up Pipe	Hardware Kit	Exhaust Pipe	Intake Pipe	Portal Instructions
AIRTRONIC S3/M3												
S3 B2L 12V Commercial with fuel pump	20.2029.05.0000	■										■
M3 B4L 12V Commercial with fuel pump	20.2030.05.0000	■										■
M3 B4R 12V Recreational with fuel pump	20.2031.05.0000	■										■
HEATER WITH INSTALLATION KIT												
Install Kit - Airtronic S3 B2L 12V	20.2820.29.0200	■	■	■	■	■			■	■	■	■
Install Kit - Airtronic M3 B4L 12V	20.2820.30.0400	■	■	■	■	■			■	■	■	■
Install Kit - Air M3 B4L 12V w/ EPRO P/U **PREFERRED**	20.2820.30.0402	■	■	■	■	■	■	■	■	■	■	■
Install Kit - Airtronic M3 B4R 12V/24V	20.2820.31.0400	■	■	■		■			■	■	■	■

■ Items in the Kit

HARDWARE KIT INCLUDES:

Mounting Screws
Nuts
Ducting Clamps
Flanges
Screens
Washers
Grommets
Routing Clamps
Exhaust Clamps
End Caps
Exhaust Brackets



FUEL SYSTEM INCLUDES:

Clamps
5 mm Fuel Line
Plastic Fuel Line
3.5 mm Fuel Line

Refer to the Accessories Section for ducting components and additional accessories. Refer to heater manual for individual installation parts.

AIRTRONIC S3/M3
ACCESSORIES

		Heater	Harness	Fuel System	Ducting	Mounting Bracket	Control Options / Timers	Fuel Pick-up Pipe	Hardware Kit	Exhaust Pipe	Intake Pipe	Portal Instructions
RETURN AIR KIT												
60mm D2 Airtronic	20.2800.50.0202				■							
75mm B/D4 Airtronic	20.2800.50.0400				■							
Ax1 to Ax2/Ax3 TRANSITION HARNESSES KIT												
Ax1 to Ax2/Ax3 heater harness adaptor	20.2900.70.0025		■									
Ax1 to Ax2/x3 FMP harness adaptor	20.2900.70.0026		■									
NOTE: It is recommended to use the return air kit when using the transition harness												
INSTALL KIT - AS3D2L ENCLOSURE - NO HEATER												
Install kit - AS3D2L Enclosure - no heater	20.2829.40.2953				*	■			■		■	■

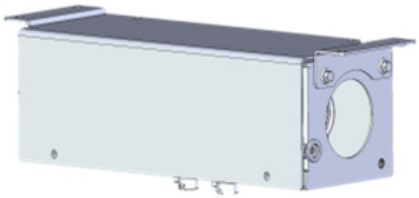

* i. 75mm Inlet & Outlet adaptors included.

ii. 75mm ducting (PN# 5550007) will be required to be ordered seperately depending on length required.

AIRTRONIC L3/XL3
DIESEL AIR HEATER - 20,500 BTU / 26,000 BTU

		Heater	Harness	Fuel System	Ducting	Mounting Bracket	Control Options / Timers	Fuel Pick-up Pipe	Hardware Kit	Exhaust Pipe	Intake Pipe	Boxed Enclosure	Portal Instructions
AIRTRONIC L3/XL3 - DIESEL													
L3 D6L 12V Commercial with fuel pump - No installation parts	25.2959.05.0000	■											■
L3 D6L 24V Commercial with fuel pump - No installation parts	25.2960.05.0000	■											■
XL3 D8L 24V Commercial with fuel pump - No installation parts	25.3020.05.0000	■											■
INSTALL KITS													
Install Kit - AL3 D6L 12/24V/ EPRO-NO HTR	20.2829.60.0600		■	■	■	■	■		■	■	■		■
Install Kit - AXL3 D8L 24V - NO HEATER	20.2830.20.0800		■	■	■	■			■	■	■		■

HARDWARE KIT INCLUDES:

Fuel Clamps	Exhaust Clamps	Washers	Exhaust Brackets
Nuts	Mounting Screws	Routing Clamps	
Cable Ties	Ducting Clamps	End Caps	

FUEL SYSTEM INCLUDES:
Clamps
5 mm Fuel Line
Plastic Fuel Line
3.5 mm Fuel Line

Refer to the Accessories Section for ducting components and additional accessories.
Refer to heater manual for individual installation parts.

AIRTRONIC L3/XL3
DIESEL AIR HEATER - 20,500 BTU / 26,000 BTU

ECHO / CARGO KITS

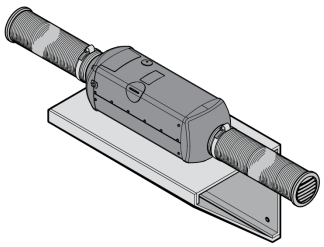

Cargo install kits

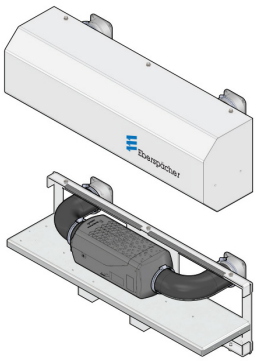

ECHO series install kits

		Heater	Harness	Fuel System	Ducting	Mounting Bracket	Control Options / Timers	Fuel Pick-up Pipe	Hardware Kit	Exhaust Pipe	Intake Pipe	Boxed Enclosure	Portal Instructions
ECHO AXL3 D8L ASSEMBLY 12V DC/110 V AC	20.2830.20.0801	■	■	■	*	■	■	■	■	■	■	■	■
ECHO AL3 D6L HEATER ASSEMBLY 12V ++	20.2829.59.0461	■	■	■	■	■	■	■	■	■	■	■	■
INSTALL KIT – ECHO AX3 4/6 12V - NO HTR ++	20.2829.59.0462 **		■	■		■	■	■	■	■	■	■	■
INSTALL KIT – CARGO AX3 4/6 WALL- NO HTR ++	20.2829.59.0463 *		■	■	*	■	■	■	■	■	■		■

Additional parts for Echo / Cargo kits marked with asterix (or *)**

** PN 20.2829.59.0462 does not come with the heater and outlet hood.

Select from following list of heater and its outlet hood (90 mm) combinations:

1. 20.2829.59.0462 with AL3 D6L Heater
   - 12V AL3 D6L Heater: 25.2959.05.0000
   - Duct hood (90 mm) for D6L: 22.1000.01.0086
2. 20.2829.59.0462 with AM3 D4R Heater
   - 12V AM3 D4R Heater: 25.2957.05.0000
   - Duct hood (90 mm) for D4R: 22.1000.01.0019
3. 20.2829.59.0462 with AM3 B4R Heater
   - 12V AM3 B4R Heater: 20.2031.05.0000
   - Duct hood (90 mm) for B4R: 22.1000.01.0019

* PN 20.2829.59.0463 does not come with the heater and outlet hood.

Select from following list of heater and its outlet hood (90 mm) combinations:

1. 20.2829.59.0463 with AL3 D6L Heater
   - 12V AL3 D6L Heater: 25.2959.05.0000
   - Duct hood (90 mm) for D6L: 22.1000.01.0086
2. 20.2829.59.0463 with AM3 D4R Heater
   - 12V AM3 D4R Heater: 25.2957.05.0000
   - Duct hood (90 mm) for D4R: 22.1000.01.0019
3. 20.2829.59.0463 with AM3 B4R Heater
   - 12V AM3 B4R Heater: 20.2031.05.0000
   - Duct hood (90 mm) for B4R: 22.1000.01.0019

++ Enhance 12V CARGO/ECHO 6 with shore power input option: (PNs: 20.2829.59.0461, 20.2829.59.0462, 20.2829.59.0463)

1) Shore power plug in (110V AC)
   - 110V AC- 12V DC Power converter assembly: 20.2900.70.0172
   - Power receptacle box assembly; 20.2900.40.8005

For further information related to power converter and its electrical connections, please contact Eberspaecher technical support at;
https://service.eberspaecher.com/en/

PRODUCT PACKAGE FOR AIRTRONIC S3, M3 AND L3

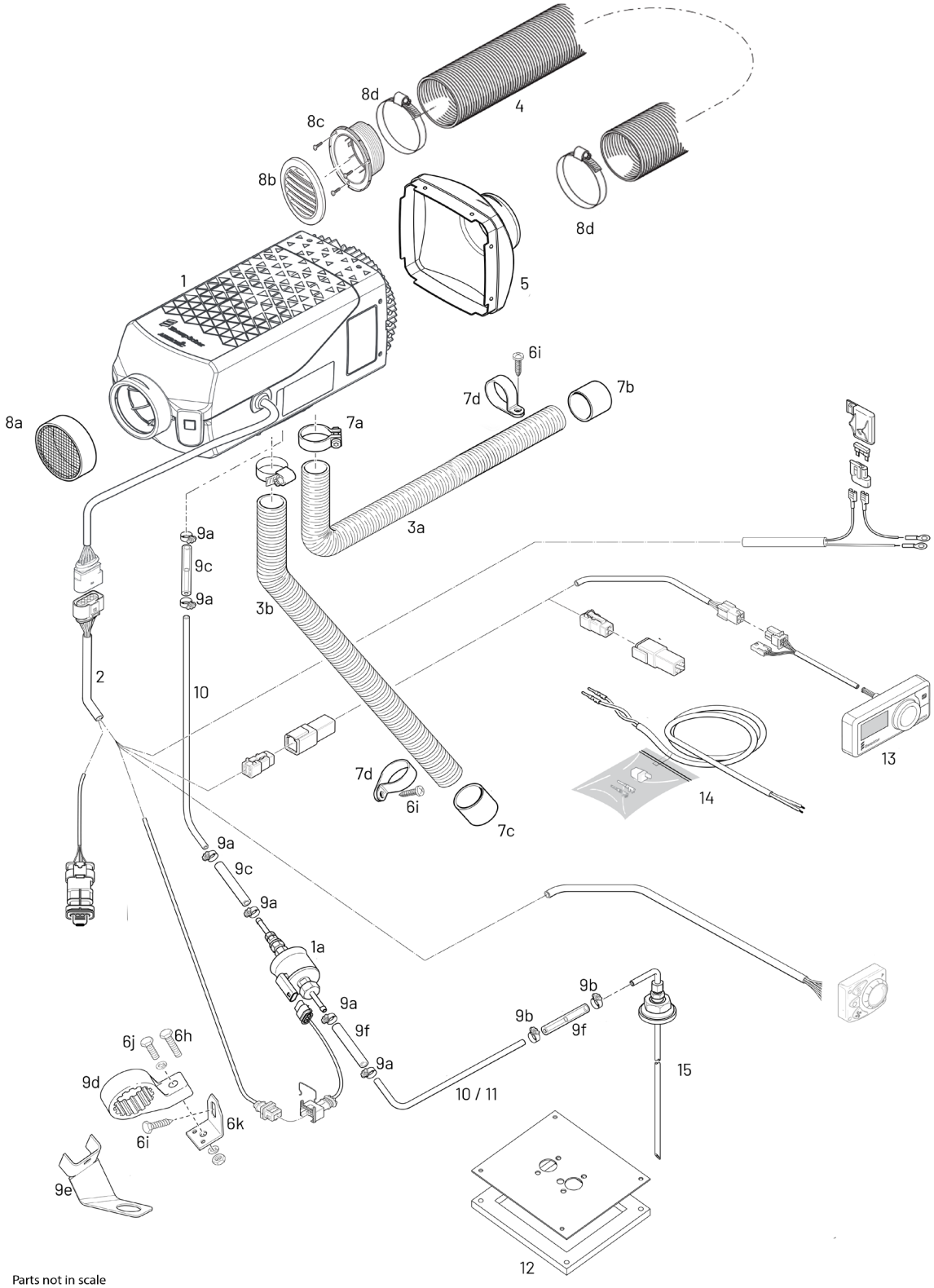

PRODUCT PACKAGE FOR AIRTRONIC S3, M3 AND L3

Heater – scope of supply includes:	
1	Heater
1a	Metering pump (ill. not for Airtronic XL3)
Airtronic S3/M3/L3 Diesel installation kit(20.2829.53.0200):	
2	cable harness modular AX2_AX3 12V_24V
3, a-b	Air Intake and Exhaust Assembly
4	Flex Air Hose 60mm/90mm X 0.74m~
5	Hood 60MM/90mm Straight
6, a-l	Bag parts - Mounting Hardware
7, a-e	Bag parts - Air/Exhaust
8, a-d	Bag parts - Ducting
9, a-f	Bag parts - Fuel components
10	Plastic fuel line - 2mm
12	Mounting plate/Seal/Screws
	ADDITIONAL/OPTIONAL PARTS
	(Not included in kit, to be ordered seperately)
13 & 14	CAN ControllerAdapter Cable
15	Fuel Pick-up tube

Airtronic S3 B2L installation kit (20.2820.29.0200):	
2	cable harness modular AX2_AX3 12V_24V
3, a-b	Air Intake and Exhaust Assembly
4	Flex Air Hose 60mm X 0.74m~
5	Hood 60MM Straight
6, a-l	Bag parts - Mounting Hardware
7, a-e	Bag parts - Air/Exhaust
8, a-d	Bag parts - Ducting
9, a-f	Bag parts - Fuel components
10	Plastic fuel line - 2mm
11	Plastic fuel line - 1.5 mm
12	Mounting plate/Seal/Screws
Airtronic XL3 D8L installation kit (20.2830.20.0800)*:	
2	cable harness modular AX2_AX3 12V_24V
3, a-b	Air Intake and Exhaust Assembly
4	Flex Air Hose 60mm X 0.74m~
6	Bag parts - AXL3 Hardware
8	Bag parts - AXL3 Fuel components
10	Plastic fuel line 2mm X 6.0m~
16	Exhaust Sleeve 1in x 2ft~
17	Fuel hose 5.0mm X 2.0m
18	Cargo mounting plate assembly
19	Reduction hood 100

* The image on page 18 differs from the Airtronic XL3 installation components in some cases, including the exhaust system, combustion-air intake, and metering pump with adapter cable.

Note: Not all parts included in the scope of supply of North America

PRODUCT INFORMATION

HYDRONIC S3 ECONOMY: TECHNOLOGY

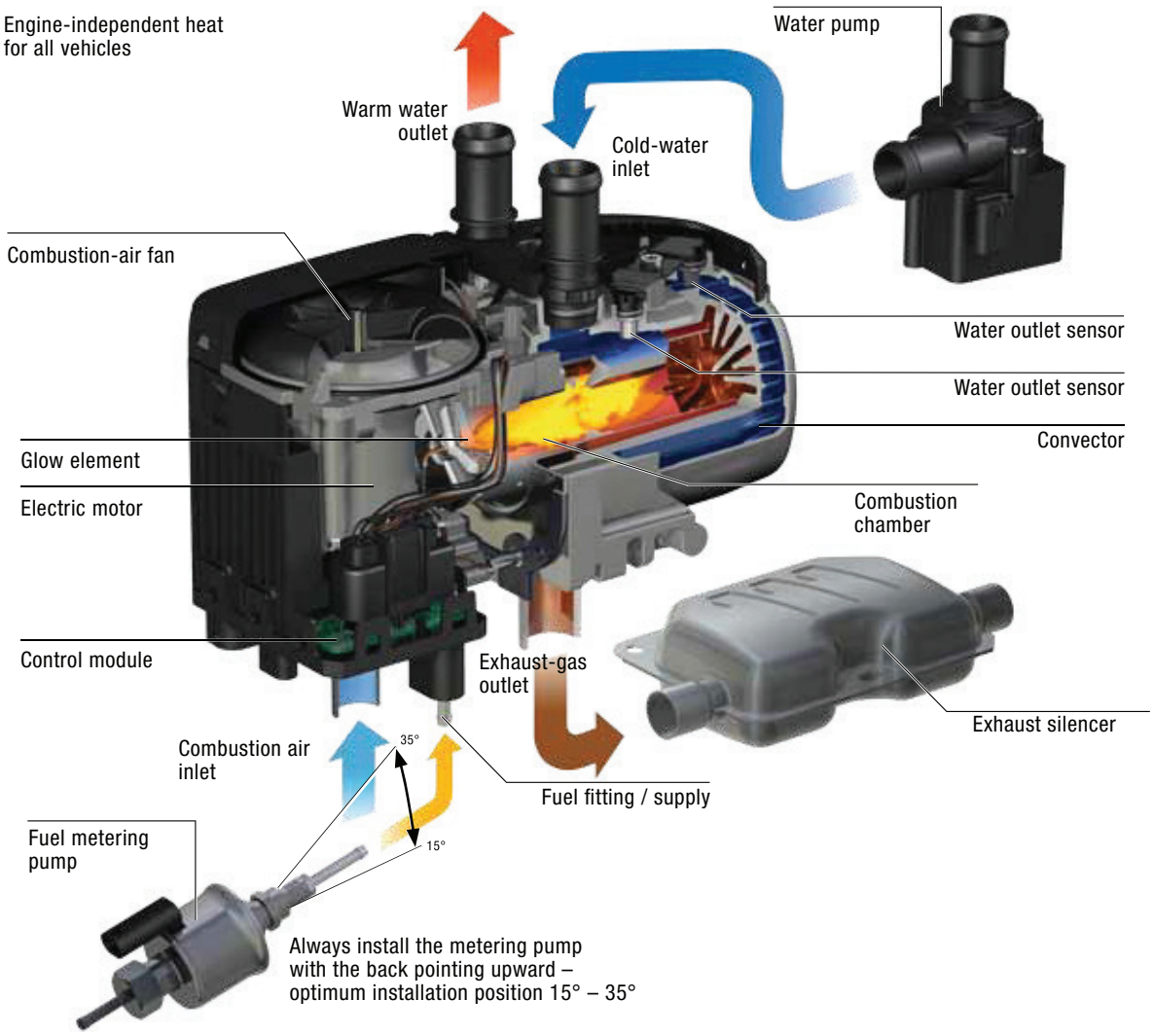

HYDRONIC S3 ECONOMY* FUNCTIONS:

- Combustion air is conveyed to the combustion chamber by the fan motor and impeller.
- Fuel is drawn from the vehicle's tank.
- Fuel is delivered to the combustion chamber by the metering pump (reciprocating pump).
- The glow element vaporizes this fuel as it enters the combustion chamber and creates a combustible fuel-air mix with the combustion air.
- The resulting flame formation switches off the glow element, transfers the heat to the cooling water via the convector, and diverts exhaust gas via the exhaust silencer.
- The cooling water circulation pump conveys cool water to the heater, where it is warmed by the convector and then routed to the vehicle's convector and combustion engine.

PRODUCT INFORMATION

HYDRONIC M-II: TECHNOLOGY

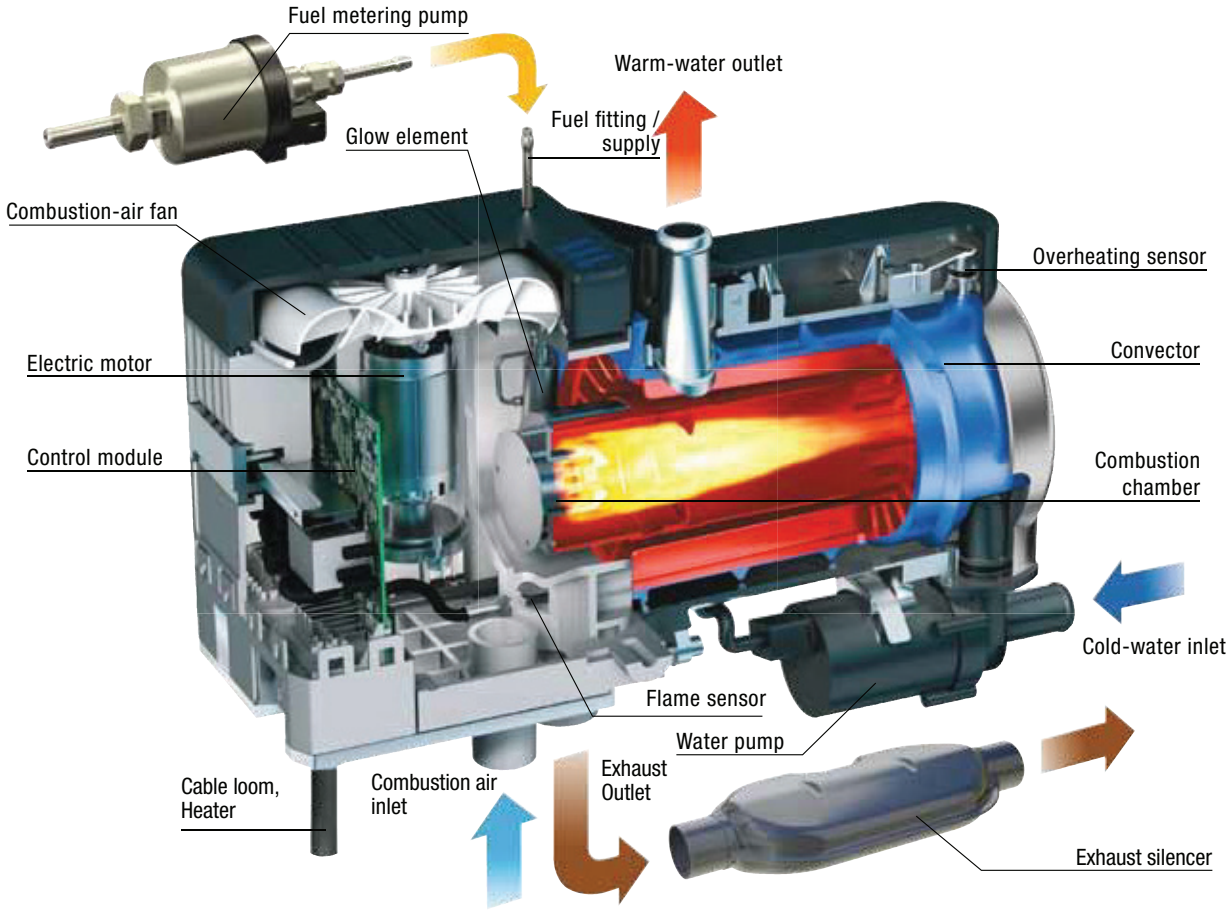

HYDRONIC M FUNCTIONS:

- Combustion air is conveyed to the combustion chamber by the fan motor and impeller.
- Fuel is drawn from the vehicle's tank.
- Fuel is delivered to the combustion chamber by the metering pump (reciprocating pump).
- The glow element vaporises this fuel as it enters the combustion chamber and creates a combustible fuel-air mix with the combustion air.
- The resulting flame formation switches off the glow element, transfers the heat to the cooling water via the convector, and diverts exhaust gas via the exhaust silencer.
- The cooling water circulation pump conveys cool water to the heater, where it is warmed by the convector and then routed to the vehicle's own convector and combustion engine.

PRODUCT INFORMATION

HYDRONIC L3 : TECHNOLOGY

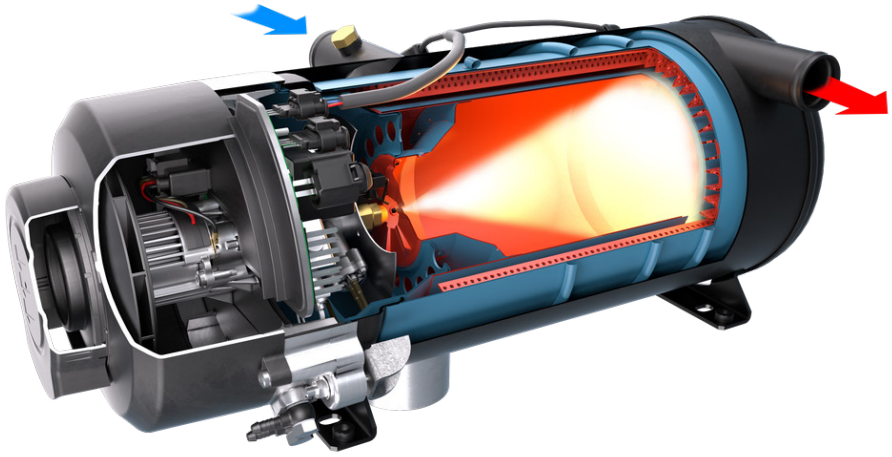

HYDRONIC L3 FUNCTIONS:

- Combustion air is conveyed to the combustion chamber by the fan motor and impeller.
- A gear pump delivers fuel from the vehicle's tank and builds up pressure against the closed solenoid valve.
- The solenoid valve opens and the fuel is atomized by the fuel nozzle in the combustion chamber / flame tube.
- The ignition spark monitor ignites the fuel-air mix.
- The resulting flame detection by an optical flame sensor switches off the ignition spark monitor, transfers the heat to the cooling water via the convector, and diverts exhaust gas via the exhaust silencer.
- The cooling water circulation pump conveys cool water to the heater, where it is warmed by the convector and then routed to the vehicle's own convector and combustion engine.

PRODUCT INFORMATION - Hydronic S3 heaters



EBERSPÄCHER HYDRONIC					
Heater		Hydronic S3 Economy	Hydronic S3 Economy	Hydronic S3 Economy	Hydronic S3 Economy
Product package		Heater	Heater	Heater	Heater
Techn. designation		HS3 CS B5E	HS3 CL B5E	HS3 CS D5E	HS3 CL D5E
Order no. for heater		20.2051.05.0000	20.2048.05.0000	25.2993.05.0000	25.2971.05.0000
Order no. for heater with PRMP*		–	–	25.2994.05.0000	25.2990.05.0000
Fuel		Gasoline	Gasoline	Diesel	Diesel
Voltage	V	12	12	12	12
Heating medium		Mixture of water and anti-freeze (Proportion of antifreeze at least 10 % up to 50 % maximum)			
Control / heat settings		Infinitely variable	Infinitely variable	Infinitely variable	Infinitely variable
Heat output	W	1,800 to 5,000	1,800 to 5,000	1,300 to 5,000	1,300 to 5,000
Fuel consumption	l / h	0.23 / 0.67	0.23 / 0.67	0.15 / 0.59	0.15 / 0.59
Power consumption, heater	W	7 / 32	7 / 32	5 / 32	5 / 32
Power consumption, water pump	W	17	17	17	17
Elec. power consumption, start	W	135	135	135	135
Minimum water throughput	l / h	300	300	300	300
Lower voltage limit	V	10.5	10.5	10.5	10.5
Upper voltage limit	V	16	16	16	16
Protection rating		Heater: IP5K6K, IP5K9K, Control module: IP6K6K, IP6K9K			
Dimensions L x W x H	mm	215 x 91 x 124	215 x 91 x 124	215 x 91 x 124	215 x 91 x 124
Weight empty	kg	2.0	2.0	2.0	2.0



EBERSPÄCHER HYDRONIC		
Heater		HS3 CS D6L Commercial
Product package		Heater
Order no. for heater		25.2972.05.0000
Fuel		Diesel – standard commercially available (EN 590) Blending with max. 30 % FAME according to EN 14214 is permitted.
Voltage	V	24
Heating medium		Mixture of water and anti-freeze (Proportion of antifreeze at least 10 % up to 50 % maximum)
Control / heat settings		Infinitely variable
Heat output	W	1,300 to 5,600
Fuel consumption	l / h	0.15 / 0.65
Power consumption, heater	W	5 / 37
Power consumption, water pump	W	11
Elec. power consumption, start	W	135
Minimum water throughput	l / h	300
Lower voltage limit	V	20.4
Upper voltage limit	V	32
Interference suppression		5 (DIN EN 55025)
Dimensions L x W x H	mm	215 x 91 x 124
Weight empty	kg	2.0

*PRMP: Pressure resistant metering pump

PRODUCT INFORMATION - Hydronic M II heaters



EBERSPÄCHER HYDRONIC					
Heater		Hydronic M8 Biodiesel	Hydronic M8 Biodiesel	Hydronic M10	Hydronic M10
Product package		Heater	Heater	Heater	Heater
Techn. designation		Hydronic M-II (D8W)	Hydronic M-II (D8W)	Hydronic M-II (D10W)	Hydronic M-II (D10W)
Order no. for heater		25.2470.05.0000	25.2471.05.0000	25.2434.05.0000	25.2435.05.0000
Fuel		Diesel and FAME (biodiesel)	Diesel and FAME (biodiesel)	Diesel	Diesel
Voltage	V	12	24	12	24
Heating medium		Mixture of water and anti-freeze (Proportion of antifreeze at least 10 % up to 50 % maximum)			
Control / heat settings		low / medium / high / power	low / medium / high / power	low / medium / high / power	low / medium / high / power
Heat output	W	1,500 / 3,500 / 5,000 / 8,000	1,500 / 3,500 / 5,000 / 8,000	1,500 / 3,500 / 8,000 / 9,500	1,500 / 3,500 / 8,000 / 9,500
Fuel consumption	l / h	0.18 / 0.4 / 0.65 / 0.9	0.18 / 0.4 / 0.65 / 0.9	0.18 / 0.4 / 0.9 / 1.2	0.18 / 0.4 / 0.9 / 1.2
Power consumption, heater	W	6 / 10 / 17 / 26	6 / 10 / 17 / 26	6 / 10 / 31 / 57	6 / 10 / 31 /57
Power consumption, water pump	W	29	29	29	29
Elec. power consumption, start	W	200	200	120	120
Minimum water throughput	l / h	500	500	500	500
Lower voltage limit	V	10	20	10	20
Upper voltage limit	V	15	30	15	30
Interference suppression		5 (DIN EN 55025)	5 (DIN EN 55025)	5 (DIN EN 55025)	5 (DIN EN 55025)
Dimensions L x W x H	mm	331 x 138 x 221	331 x 138 x 221	331 x 138 x 221	331 x 138 x 221
Weight empty	kg	6.2	6.2	6.2	6.2





EBERSPÄCHER HYDRONIC			
Heater		Hydronic M12	Hydronic M12
Product package		Heater	Heater
Techn. designation		Hydronic M-II (D12W)	Hydronic M-II (D12W)
Order no. for heater		25.2472.05.0000	25.2473.05.0000
Fuel		Diesel	Diesel
Voltage	V	12	24
Heating medium		Mixture of water and anti-freeze (Proportion of antifreeze at least 10 % up to 50 % maximum)	
Control / heat settings		low / medium 1 / medium 2 / medium 3 / high / power	low / medium 1 / medium 2 / medium 3 / high / power
Heat output	W	1,200 / 1,500 / 3,500 / 5,000 / 9,500 / 12,000	1,200 / 1,500 / 3,500 / 5,000 / 9,500 / 12,000
Fuel consumption	l / h	0.15 / 0.18 / 0.4 / 0.65 / 1.2 / 1.5	0.15 / 0.18 / 0.4 / 0.65 / 1.2 / 1.5
Power consumption, heater	W	5 / 6 / 10 / 17 / 57 / 103	5 / 6 / 10 / 17 / 57 / 103
Power consumption, water pump	W	29	29
Elec. power consumption, start	W	120	120
Minimum water throughput	l / h	500	500
Lower voltage limit	V	10	20
Upper voltage limit	V	15	30
Interference suppression		5 (DIN EN 55025)	5 (DIN EN 55025)
Dimensions L x W x H	mm	331 x 138 x 221	331 x 138 x 221
Weight empty	kg	6.2	6.2

PRODUCT INFORMATION - Hydronic L3 heaters





EBERSPÄCHER HYDRONIC					
Heater		Hydronic L16	Hydronic L24	Hydronic L30	Hydronic L35
Product package		Heater	Heater	Heater	Heater
Techn. designation		Hydronic L3 (HL3-16)	Hydronic L3 (HL3-24)	Hydronic L3 (HL3-30)	Hydronic L3 (HL3-35)
Order no. for heater		25.3042.02.0000	25.3043.02.0000	25.3040.02.0000	25.3041.02.0000
Order no. for compact heater		––	25.3043.05.0000	25.3040.05.0000	25.3041.05.0000
Fuel		Diesel, fuel oil, HVO #	Diesel, fuel oil, HVO #	Diesel, fuel oil, HVO #	Diesel, fuel oil, HVO #
Voltage	V	24	24	24	24
Heating medium		Mixture of water and anti-freeze (Proportion of antifreeze at least 10 % up to 50 % maximum)			
Heat output	W	16,000	24,000	30,000	35,000
Fuel consumption	l / h	2	2.9	3.65	4.2
Power consumption, heater	W	65	85	95	110
Power consumption, water pump	W	104 – 210*	104 – 210*	104 – 210*	104 – 210*
Minimum water throughput	l / h	1,400	2,000	2,600	3,000
Lower voltage limit	V	20.4	20.4	20.4	20.4
Upper voltage limit	V	32	32	32	32
Dimensions L x W x H	mm	544 x 230 x 221	544 x 230 x 221	544 x 230 x 221	544 x 230 x 221
Weight empty**	kg	16	16	16	16

* depending on the coolant pump model
# Hydrogenated Vegetable Oil





EBERSPÄCHER COOLANT PUMPS FOR HYDRONIC L3			
Water pumps		Flowtronic 5000	Flowtronic 6000 SC
Order no. for water pump		25.2488.26.0000	25.2488.25.0000
Coolant		Water-glycol mix with up to max 50 % glycol	Water-glycol mix with up to max 50 % glycol
Delivery rate	l / h	5,200 at 0.2 bar	6,000 at 0.4 bar
Operating pressure	bar	max. 2	max. 2
Nominal voltage	V	24	24
Elec. power consumption	W	104	210
Protection class		IP5K4	IP25 (potted electronics)
Dry running		No	Yes – motor switches itself off after 45 minutes
Shaft-impeller connector		Mechanical seal	Magnetic coupling
Weight empty*	kg	2.04	2.5

HYDRONIC HS3 CS
COOLANT HEATER - 17,100 BTU / 19,100 BTU

		Heater	Harness	Fuel System	Coolant Hose	Mounting Bracket	Control Options / Timers	Fuel Pick-up Pipe	Hardware Kit	Exhaust Pipe	Intake Pipe	Boxed	Portal Instructions
HYDRONIC HS3 D5E/D6L CS - DIESEL													
D5E 12V Economy with FMP and water pump - No installation parts	25.2993.05.0000	■											■
D6L 24V Commercial with FMP and water pump - No installation parts	25.2972.05.0000	■											■
HEATER WITH INSTALLATION KIT													
Install Kit HS3 CS D5E 12 V	25.2829.34.0500	■	■	■	■	■			■	■	■		■
Install Kit HS3 CS D5E Boxed 12 V Right	25.2829.34.0501	■	■	■		■	■		■	■	■	■	■
Install Kit HS3 CS D5E Boxed 12 V Left	25.2829.34.0505	■	■	■		■	■		■	■	■	■	■
Install Kit HS3 CS D5E 12 V w/ EPRO P/U	25.2829.34.0504	■	■	■		■	■	■	■	■	■		■
CONVERSION KIT - HYD1-S/SC TO HS3CS D5E 12V	25.2829.40.2993		■			■			■				■
Install Kit HS3 CS D6L 24 V	25.2827.45.0600	■	■	■	■	■			■	■	■		■
Install Kit HS3 CS D6L Boxed 24 V Right	25.2827.45.0601	■	■	■		■	■		■	■	■	■	■
CONVERSION KIT - HYD1-S/SC TO HS3CS D5E 24V	25.2829.40.2972		■			■			■				■
HYDRONIC HS3 B5E CS - GASOLINE													
B5E 12V Economy with FMP and water pump - No installation parts	20.2051.05.0000	■											■
HEATER WITH INSTALLATION KIT													
Install Kit HS3 CS B5E 12 V	25.2820.51.0500	■	■	■	■	■			■	■	■		■
HS1 to HS3 **TRANSITION HARNESSES** KIT													
HS1 to HS3 heater harness adaptor	25.2900.70.0516												
Ax2/HS3 FMP harness	20.2900.70.0020												
New ! HS3 heater version with Flowtronic coolant pump													
HS3 CS D5E 12V heater version (includes FMP & 12V Flowtronic WP)	25.3123.05.0000	■											
INSTALL KIT - HS3CS D5E 12V FLOWTRONIC	25.2829.10.0001	■	■	■	■	■	■	■	■	■	■	■	■
Flowtronic water pump (WATERPUMP 12V - MII)	25.2434.99.2501												

■ Item in the kit

HYDRONIC HS3 B/D5E/D6L CS



Boxed Kit



Hydronic S3 heater

HARDWARE KIT INCLUDES:

Fuel Clamps
Nuts
Cable Ties
Grommets
Exhaust Clamps
Mounting Screws
Ducting Clamps
Washers
Routing Clamps
End Caps
Exhaust Brackets

FUEL SYSTEM INCLUDES:

Clamps
5 mm Fuel Line
Plastic Fuel Line
3.5 mm Fuel Line

Refer to the Accessories Section for ducting components and additional accessories.

HYDRONIC AQUASYSTEM FOR RV's
HS3 - 17,100 BTU

		Heater	Harnesses - all	Fuel System	Fuel Pick-up Pipe	Hardware Kit	Exhaust Pipe	Intake Pipe	Touchscreen Display	I/O control unit	High altitude module	Plate Heat Exchanger	Coolant reservoir	Thermostatic valve	Heating element *	Thermostat switch	Y-cord, heating element	Silencio 2 - (Qty 2)	
Hydronic AquaSystem NA - DIESEL																			
Install Kit with HS3 D5 12V	25.2800.10.0001	■	■	■		■	■	■	■	■	■	■	■	■	■	■	■	■	
Hydronic AquaSystem NA - GASOLINE																			
Install Kit with HS3 B5E 12V	25.2800.10.0002	■	■	■		■	■	■	■	■	■	■	■	■	■	■	■	■	

* Heating Element 1500 W /120 VAC

■ Item in the kit

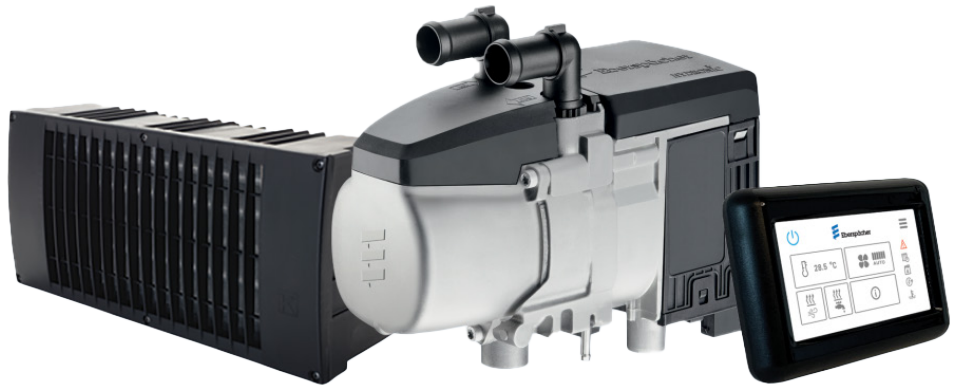

HARNESSES INCLUDES :

Hydronic S3 heater harness
Touch Screen harness
Control Power harness
Coolant pump harness
CAN Bus extension harness

FUEL SYSTEM INCLUDES :

Plastic fuel line 2mm X 8.0m~
Fuel hose 3.5mm X 50mm~
Fuel line adaptor 3.5 TO 5 MM
FMP holder
Clamps

HARDWARE KIT INCLUDES :

Grommets	End Caps	Nuts
Exhaust Clamps	Washers	Exhaust Brackets
Cable Ties	Mounting Screws	Routing Clamps

Refer to the Accessories Section for ducting components and additional accessories.

HYDRONIC M-II
SERIES: 27,300 /32,450 /42,000 BTU

		Heater	Harness	Fuel System	Coolant Hose	Mounting Bracket	Control Options / Timers	Fuel Pick-up Pipe	Hardware Kit	Exhaust Pipe	Intake Pipe	Boxed	Portal Instructions
HYDRONIC M II													
HYDRONIC M8 biodiesel 12 volt	25.2470.05.0000	■											■
HYDRONIC M8 biodiesel 24 volt	25.2471.05.0000	■											■
HYDRONIC M10 12 volt	25.2434.05.0000	■											■
HYDRONIC M10 24 volt	25.2435.05.0000	■											■
HYDRONIC M12 12 volt	25.2472.05.0000	■											■
HYDRONIC M12 24 volt	25.2473.05.0000	■											■
HYDRONIC M12 24 volt w/Hella	25.2725.05.0000	■											■
HYDRONIC M12 12 volt Boxed Kit	25.2824.72.1210	■	■	■		■		■	■	■	■	■	■
HYDRONIC M12 24 volt Boxed Kit	25.2824.73.1210	■	■	■		■		■	■	■	■	■	■
HYDRONIC M12 12 volt Boxed Kit w/high Capacity Pump	25.2824.72.0012	■	■	■		■		■	■	■	■	■	■
HYDRONIC M12 24 volt Boxed Kit w/high Capacity Pump	25.2824.73.0024	■	■	■		■		■	■	■	■	■	■
UNIVERSAL INSTALLATION KITS													
Eberspaecher Universal Install 12V with diagnostic connection	25.2800.90.1012		■	■		■			■	■	■		
Eberspaecher Universal Install 24V with diagnostic connection	25.2800.90.1024		■	■		■			■	■	■		
Air Int Muffler w/end Cap	25.1786.80.0200										■		

■ Item in the kit



Boxed Kit



Hydronic M II heater

HYDRONIC M-II — BUILD YOUR OWN KIT
SERIES: 42,000 BTU - CARB APPROVED

		Heater	Harness	Fuel System	Coolant Hose	Mounting Bracket	Control Options / Timers	Fuel Pick-up Pipe	Hardware Kit	Exhaust Pipe	Intake Pipe	Boxed	Portal Instructions
HYDRONIC M II STEP 1 - SELECT BASIC KITS:													
HYDRONIC M12 12 volt, Basic assambly	25.2824.72.1203	■	■	■		■			■	■	■		■
HYDRONIC M12 24 volt, Basic assambly	25.2824.73.1201	■	■	■		■			■	■	■		■
STEP 2 - SELECT ONE OF THE FOLLOWING CONTROL OPTIONS													
EasyStart Timer	22.1000.34.1500						■						
Programmable Timer With LVD	25.2800.70.1010						■						
Programmable Timer With LVD Dual Input	25.2800.70.2020						■						
Programmable Timer w/LVD Dual Output Switch	25.2800.70.3030						■						
STEP 3 - SELECT FUEL PICK-UP PIPE OPTIONS													
Fuel Pick-up Pipe 4mm with 1/2 NPT	20.2900.20.2050							■					
Fuel Pipe with Vent 4mm ID - 19.5 IN	20.2900.20.4006							■					

■ Item in the kit

E-GUARDIAN DIESEL / WATER

E-Guardian HYDRONIC M-II KITS		Heater	Harness	Fuel System	Coolant Hose	Mounting Bracket	Control Options / Timers	Fuel Pick-up Pipe	Hardware Kit	Exhaust Pipe	Intake Pipe	Boxed	Portal Instructions
Boxed D12 E-GUARDIAN II ASMBLY 12V	25.2824.72.1202	■	■	■		■	■	■	■	■	■	■	■
Boxed D12 MII - Series Asmbly - 12V	25.2824.72.1210	■	■	■		■		■	■	■	■	■	■
Boxed D12 MII - Series Asmbly - 24V	25.2824.73.1210	■	■	■		■		■	■	■	■	■	■

■ Item in the kit



HARDWARE KIT INCLUDES:

Fuel Clamps
Nuts
Cable Ties
Grommets
Exhaust Clamps
Mounting Screws
Ducting Clamps
Washers
Routing Clamps
End Caps
Exhaust Brackets

FUEL SYSTEM INCLUDES:

Clamps
5 mm Fuel Line
Plastic Fuel Line
3.5 mm Fuel Line

Refer to the Accessories Section for ducting components and additional accessories.

HYDRONIC L3
SERIES: 55,000, 82,000, 102,000, 120,000 BTU

HYDRONIC L3-16	
Basic Heater 24V	25.3042.02.0000
HYDRONIC L3-24	
Basic Heater 24 volt	25.3043.02.0000
Hydronic L3-24 **Compact**	
Water pump Flowtronic 5000 and fuel filter pre-assembled	25.3043.05.0000
HYDRONIC L3-30	
Basic Heater 24 volt	25.3040.02.0000
HYDRONIC L3-30 **Compact**	
Water pump Flowtronic 5000 and fuel filter pre-assembled	25.3040.05.0000
HYDRONIC L3-35	
Basic Heater 24 volt	25.3041.02.0000
HYDRONIC L3-35 **Compact**	
Water pump Flowtronic 5000 and fuel filter pre-assembled	25.3041.05.0000

Additional parts which have to be ordered separately

Water Pump, Flowtronic 5000	25.2488.26.0000
Water pump, Flowtronic 6000 SC	25.2488.25.0000
Water Pump, Flowtronic 5000S	25.1818.30.0000
Hose clip, ø 40-47 mm	152.09.017
Hose elbow, ø 38 mm	25.1799.80.0001
Connection pipe, ø 38 mm	25.1214.89.0021
T-piece, ø 38-38-38	25.1371.89.0400
Reducer, ø 38/28 mm	25.1214.89.0019
Hose clip, ø 32-39 mm	10.2067.03.2050
Pipe elbow, ø 38 mm	25.1214.89.0003
Water hose, ø 38 mm	360.75.413
Exhaust pipe socket, ø 70 mm	22.1000.40.0400
Exhaust pipe elbow, ø 70 mm	22.1000.40.0300
Fuel filter	25.2599.05.0100
Banjo bolt, M14 x 1.5	104.09.002
Sealing ring, A14 x 18	323.16.006
Fuel suction line, Ø 5 x 3, length: 800 mm	25.2488.05.0400
Screw, M14 x 1.5	266.42.004
Ball bushing	263.61.001
Union nut, M14 x 1.5	116.09.003
Fuel pipe, Cu, according to DIN 1786, Internal diameter Ø 6	- - - - - - - -
Fuel hose,	360.75.350
Fuel hose, ø 5 x 3	
Hose clip, Ø 11 mm	10.2068.01.1098
Screw, M14 x 1.5	266.09.005
Rubber buffer M6 x 10 Height: 15 mm	20.1607.65.0002
Fuel return line, Ø 5 x 3, length: 750 mm	25.1698.05.0400
Ball valve	25.2488.05.0200
Reducer coupling 8 / 6	266.00.026
Shroud with hose connection	22.1000.40.0600
1 m flexible hose, ø 60 mm	10.2114.31.0000
Hose clip 10.2067.05.0070	10.2067.05.0070
Air hose fixing kit	22.1000.50.0200
Plastic grille	25.1688.80.0600
Nozzle holder	22.1000.01.0035
Nozzle	10.2067.05.0070
Hose connection nozzle	22.1000.01.0005
Adapter	25.1226.89.0050

CABLES & CONNECTORS

1.	Connection parts electrical HL3	25.3040.89.0100.0A
2.	Adapter cable CAN operating unit	25.3040.89.0200.2A
3.	Adapter cable diagnose	25.3040.89.0300.2A
4.	Supplement kit	25.3040.89.0400.0A
5.	Adapter cable HL2 to HL3	25.3040.89.0500.2A
6.	Adapter cable waterpump Flow 5000/6000SC	25.3040.89.0600.2A

1. All mating connectors to the heater, no wires included
2. Adapter to EasyStart Pro connector with terminating resistor. Cannot be used on it's own. Requires 25.3040.89.0400 to wire in Power and Ground for the EasyStart Pro.
3. Diagnostic Y-cable. Installed between heater and controller cable to provide an EasyScan diagnostic port. Note: EasyScan will not be supplied with power and ground.
4. Connector required to build a CAN or LIN control cable and supply power and ground to the controller. Wires not included. To use an EasyStart Pro as the controller 25.3040.89.0200 is required in addition.
5. Cable for connecting HL3 into the old HL2 harness
6. Cable for connecting water pump into the heater.

Connecting EasyStart Pro requires items 2 and 4.
Retrofitting HL3 into older HL2 setup without EasyStart PRO and diagnostic requires items 5 and 6.
New install with EasyStart PRO and diagnostic connector requires items 1, 2, 3, 4 and 6.



HYDRONIC L3

HYDRONIC L3 - BOXED KITS

HYDRONIC L3 boxed installation kit		Heater	Harness	Fuel System	Coolant pump	Power Convertor	Control Options / Timers	Fuel Pick-up Pipe	Hardware Kit	Exhaust Pipe	Intake pipe	Boxed enclosure	Portal Instructions
Installation Kit - Boxed HYDRONIC L3, 30kW, 12V	25.2800.10.3030	■	■	■	■	■			■	■		■	■

■ Items in the kit

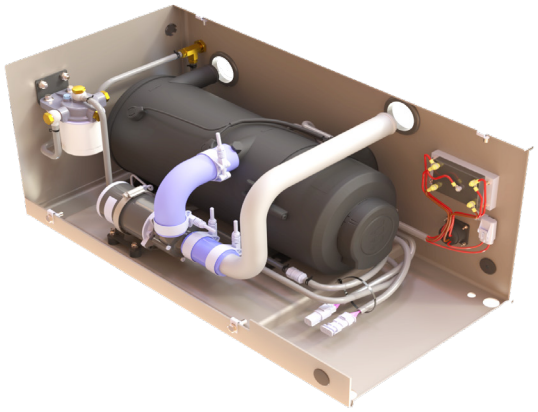

Fuel

Hose Fuel 5 x 3mm black rubber	360.75.350
Single Pick-up Pipe 4.0 mm with Return (61 cm or 24")	20.2900.20.2059
Clamp 11mm, 4 qty.	10.2068.01.1098

Controls

EasyStart PRO	20.2800.70.2200
Programmable Switch	25.2800.70.1010
EasyStart Timer	22.1000.34.1500

- Packaged for Off-Highway and Oilfield applications
- Eliminate cold starts
- Minimize diesel exhaust emissions
- Rugged, compact
- Versatile fluid pre-heating
- Standard with pre-heated nozzle

CONTROL OPTIONS AND TIMERS

Available Functions					
Order Number	22.1000.35.2200	22.1000.34.1500	20.2800.70.2300	5670433 12V	25.2800.70.1010
Heater On/OFF with status indicator	■	■	■	■	■
Run Time limiter with selectable presets	■	■	■	■	■
Built in diagnostic with fault code display	■	■	■		
Clearing codes and unlocking capability	■	■	■		
Illuminated turn and push control dial	■				
Programmable Timer	■	■	■	■	
Multiple Starts-Day/Week	■	■	■	■	
Use of residual heat	■				
Synchronization of two controllers	■				
High Altitude mode		■			
Grouping heaters	■				
Standard Fan Mode	■	■			
Programmable LVD	■	■	■		■
Low voltage shutdown		■	■		■
Onboard temperature sensor	■				
Setpoint switchable between F and C	■	■			
Hour meter			■		■
Maintenance message	■				
External device control	■	■			
Easyscan integration	■				
Multilingual interface	■	■			
‘Check Heater’ warning	■				
Ambient air sensor	■			■	
Diagnostic codes	■	■	■		
Standard fan mode	■	■			
10-hour automatic shut-off	■		■		
Manual start mode	■	■	■	■	■
Program memory	■	■		■	
External inputs	■	■			■
Air heaters	■	■	■		
Coolant heaters	■	■	■	■	■

CONTROL OPTIONS AND TIMERS

Control units







Model	EasyStart Pro	EasyStart Timer	EasyStart Select	Airtronic mini-controller	EasyStart Duty
Order number	22.1000.35.2200	22.1000.34.1500	22.1000.34.1300	22.1000.32.0700	22.1000.35.5000
Interface	CAN	LIN, S+	LIN	S+	CAN, LIN, S+
Control unit compatibility with heaters					
 Hydronic S3 12V CS Economy	CAN	S+ *	–	–	CAN / S+
 Hydronic S3 24V CS Commercial	CAN	S+ *	–	–	CAN / S+
 Hydronic S3 12V CL Economy	–	LIN	LIN	–	LIN
 Hydronic M II 12/24 V	–	LIN	LIN	–	LIN
 Hydronic L3 24V (16/24/30/35 kW)	CAN / E-Control	LIN	LIN	-	CAN / LIN
 Airtronic S3/M3/L3 12 V Commercial	CAN	LIN	LIN	S+ **	CAN / S+
 Airtronic M3 12V Recreational	CAN	LIN	LIN	S+ **	CAN / S+
 Airtronic S3/M3/L3/XL3 24V Commercial	CAN	S+ * No setpoint input possible	–	S+ **	CAN / S+

* With restricted function: diagnostics cannot be run via the control unit

** With restricted function: No external temperature sensor possible. Additional temperature setting resistor may be needed to avoid trouble codes.

CONTROL OPTIONS AND TIMERS - EASYSTART PRO



1. Advantages (functions):

- Intuitive navigation via a control knob
- Integrated temperature sensor
- Operation of up to two heaters separately or two identical (Airtronic or Hydronic) heaters in a group
- Simple plain text diagnostics for users
- Detailed diagnostics function for the workshop
- Integrated residual heat function for Hydronic (CS) heaters: efficient heating using the engine's residual heat
- Altitude mode can be activated manually above 1,500 m (Hydronic S3 Economy (CS))
- Easy-to-read system status display (home screen)
- Timer function: up to three programming locations available
- Display and LED color ring for clearly indicating the status in all operating conditions
- Various installation variants possible (surface mounting with concealed or visible cable routing, flush mounting)
- Mounting-optimized ribbon cable
- Endless heater operating time can be set (Airtronic 2 + Airtronic 3 and Hydronic S3 (CS))
- Menu operation available in English and German, as well as 25 other languages via EasyScan

2. Additional features:

- Setup assistant simplifies installation
- Maintenance interval setting possible
- Immediate heating via the long-press function
- Integration of an additional CAN control unit possible: EasyStart Web (from Q2/2020) or additional EasyStart Pro
- Permanent display illumination possible
- ADR compliant
- Easy diagnostics via EasyScan; no disassembly required

Technical data:

Order number		22.1000.35.2200
Dimensions L x W x H	mm	81.8 x 37.0 x 13.5 (without control knob) 81.8 x 37.0 x 18.6 (with control knob)
IP type of protection		IP5K2
Average standby current draw	mA	< 0.4
Operating temperature	°C	-40 to +85

CONTROL OPTIONS AND TIMERS

			Airtronic S (2.2 kW)	Airtronic M (4 kW)	Airtronic L (5.5 kW)	Airtronic XL3	Hydronic S3 (5-6 kW)	Hydronic L3 (16-35 kW)	Hydronic M-II (8-12 kW)	Part number
Mini Controller 12 and 24 volt Mini Controller Knob			~	~	~	~				22.1000.32.0700 a
Control unit - single part 7-pin bushing connector housing	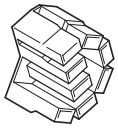	24 volt	~	~	~	~				206.31.282
Rheostat Switch	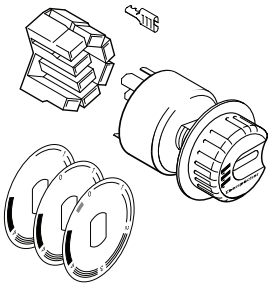	*12 volt	~	~	~	~				25.1895.71.0000
		*24 volt	~	~	~	~				25.1896.71.0000
		**24 volt	~	~	~	~				25.1768.71.0000
Wi-Fi Remote Control			~	~	~	~				20.2800.70.2300

* with bushing connector housing and bushing connector
** without bushing connector housing and bushing connectors/only for air heater 8 L

~ = No ventilation, no diagnostic information

~ restricted use no diagnostic

CONTROL OPTIONS AND TIMERS

	Airtronic S (2.2 kW)	Airtronic M (4 kW)	Airtronic L (5.5 kW)	Airtronic XL3	Hydronic S3 (5-6 kW)	Hydronic L3 (16-35 kW)	Hydronic M-II (8-12 kW)	Part number
Programmable Timer (No Diagnostic) 								
12 V					~	■	■	5670433
24 V					~	■	■	5670434
Programmable Timer with LVD 								
Dual Input					~	■	■	25.2800.70.1010
Programmable Timer with LVD, Dual Outputs-Detached					~	■	■	25.2800.70.2020
Push button with 24" leads for 25.2800.70.3030					~	■	■	25.2800.70.3030
					~	■	■	25.2800.70.3035
Push / Pull Switch 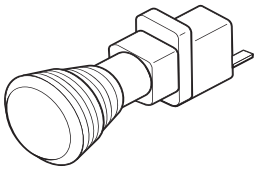								
Push / Pull Switch 12 volt					~	■	■	5670007
External and internal temperature control sensor, flush wall-mounted installation 2m Cable harness 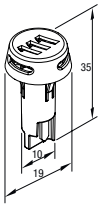  * Can also be combined with control unit	■	■	■	■				22.1000.35.2100
EASYSTART DUTY (NEW) 	■	■	■	■	■	■	■	22.1000.35.5000
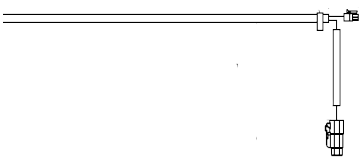 EasyStart Duty Adapter harness	■	■	■	■	■	■	■	25.2900.70.0314

■ unrestricted use ~ restricted use no diagnostic

CONTROL OPTIONS AND TIMERS

	Airtronic S (2.2 kW)	Airtronic M (4 kW)	Airtronic L (5.5 kW)	Airtronic XL3	Hydronic S3 (5-6 kW)	Hydronic L3 (16-35 kW)	Hydronic M-II (8-12 kW)	Part number
EasyStart Timer								
For; • Hydronic 1 • Hydronic 2 • Hydronic S3 CL • Hydronic M2 • Airtronic 1 • Airtronic 2 • Airtronic 3	~	~	~	~	~	~	~	22.1000.34.1500
~ = For Hydronic S3 Economy (CS): possible only with S+; no diagnostic option								
Control Kit - EasyStart Pro with Adaptor								
Control Kit - EasyStart PRO with Adaptor	■	■	■	■	■	■		20.2800.70.2200
EasyStart PRO 12 V / 24 V	■	■	■	■	■	■		22.1000.35.2200
EasyStart Select								
For Hydronic 1, Hydronic 2, Hydronic S3 CL, Hydronic M2 and Airtronic 1 Airtronic 2 and Airtronic 3								
12 V / 24 V	~	~	~		~	■		22.1000.34.1300
~ = consider heater compatibility								

■ unrestricted use ~ restricted use, no diagnostic

TEMPERATURE SENSORS

Temperature Sensor		Airtronic S (2.2 kW)	Airtronic M (4 kW)	Airtronic L (5.5 kW)	Airtronic XL3	Hydronic S3 (5-6 kW)	Hydronic L3 (16-35 kW)	Hydronic M-II (8-12 kW)	Part number
Remote Temperature Sensor (To be used as air heater's external temperature sensor ONLY)	1	*	*	■	■				25.1774.89.0300
Controller Temperature Sensor (To be used with EasyStart Timer)	2			■			■	■	22.1000.34.2200
Temperature Sensor (To be used with EasyStart Pro & EasyStart Duty)	3	■	■	■	■	■	■	■	22.1000.34.5400

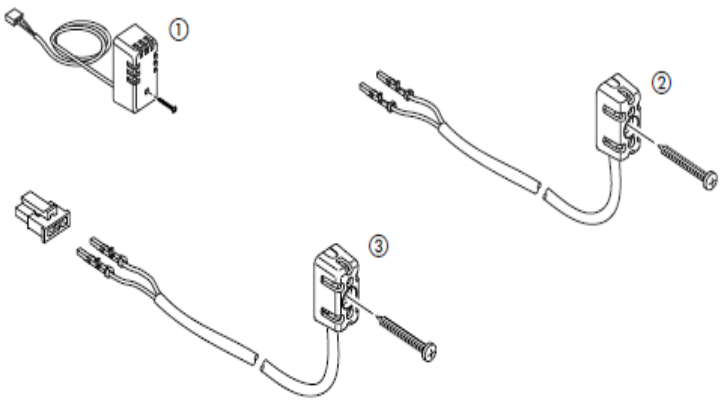

■ * Use EasyScan to configure input as external temperature sensor ■ unrestricted use ~ restricted use, no diagnostic

DIAGNOSTIC / ADAPTERS / SPECIAL TOOLS

	Airtronic S (2.2 kW)	Airtronic M (4 kW)	Airtronic L (5.5 kW)	Airtronic XL3	Hydronic S3 (5-6 kW)	Hydronic L3 (16-35 kW)	Hydronic M-II (8-12 kW)	Part number
EasyScan Diagnostic adapter  * New version For CANBUS heaters only	■	■	■	■	■	■		22.1560.89.0000
Diagnostic Tool - EasyStart PRO (For heaters with CAN Bus) 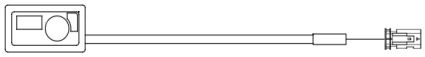	■	■	■	■	■	■		20.2900.70.0033
Adapter cable for diagnostics (For AS3 D2L 24V heaters with LECM module on Volvo trucks) 	■	■						20.2784.70.0040
Tester Adapter North America for EDITH and EasyScan								
Diagnostic Adaptor (Airtronic, Hydronic I, Hydronic II)								20.2900.70.5057
Diagnostic Adaptor Hydronic M-II							■	25.2800.70.1004
Diagnostic Adaptor Hydronic M-II E-Guardian							E	25.2800.70.0024
Adapter cable (For Diagnostic device, EDiTH Basic and EasyScan Older version)								
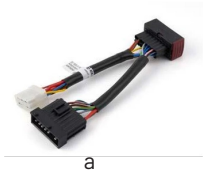 a 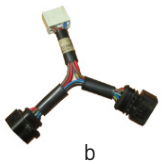 b  c  d  e								
Airtronic / Airtronic M a								22.1000.31.8600
Hydronic b								20.2900.70.5028
Hydronic 2 / Hydronic 2 C / Hydronic M2 (versions from June 2012) c								22.1000.33.7800
Hydronic L / Hydronic L2 d								22.1000.31.6600
Adapter 6-pin to 8-pin e							■	20 2900 70 5046
Adapter cable for older models of heater For EDiTH Basic only 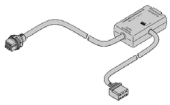 a  b  c  d								
Hydronic M a								22.1000.32.5200
Hydronic M2 (versions pre-dating June 2012) b							■	22.1000.33.4400
B / D1 LC compact, B / D3 LC compact, B / D3 LP compact c								22.1000.30.6900
B / D1 LC, B / D3 LC, B / D3 LP, B / D5 LC d								22.1000.30.2000
D9 W, Hydronic 10 e								22.1000.31.8300

* Use EasyScan to configure input as external temperature sensor ■ unrestricted use ~ restricted use, no diagnostic

DIAGNOSTIC / ADAPTERS / SPECIAL TOOLS

	Airtronic S (2.2 kW)	Airtronic M (4 kW)	Airtronic L (5.5 kW)	Airtronic XL3	Hydronic S3 (5-6 kW)	Hydronic L3 (16-35 kW)	Hydronic M-II (8-12 kW)	Part number
Altitude kit * Air pressure sensor for heating mode at altitudes up to 3,500 m above sea level 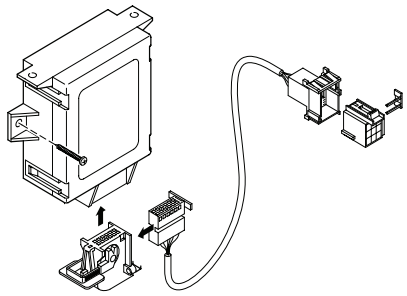 *Not meant for Ax3, Ax2 and HS3 heaters* * For use with the Airtronic / Airtronic M and Hydronic / Hydronic 2 labeled "H-Kit" on the factory plate on the side								22.1000.33.2200
Adapter cable For air pressure sensor diagnostics 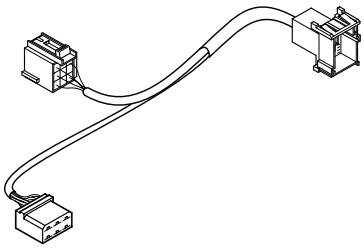								22.1000.33.3100
Blower control module 12/24 V - Heavy Duty (BCM) For coolant heaters 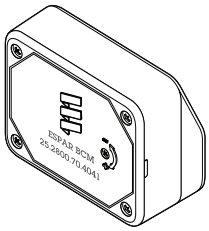					■	■	■	25.2800.70.4041
Upgrade kit IPCU Smart 12 V (AD) For coolant heaters 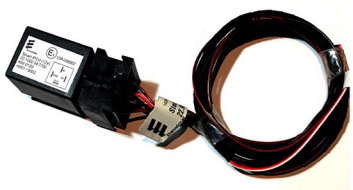					■	■	■	24.8800.00.0077
EasyScan Diagnostics Connection Cable (For older version with part number 22.1550.89.0000) 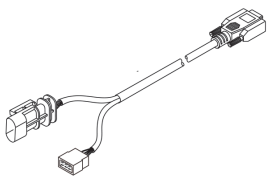								22.1000.34.5000

■ unrestricted use ~ restricted use

DIAGNOSTICS / ADAPTERS / SPECIAL TOOLS

	Airtronic S (2.2 kW)	Airtronic M (4 kW)	Airtronic L (5.5 kW)	Airtronic XL3	Hydronic S3 (5-6 kW)	Hydronic L3 (16-35 kW)	Hydronic M-II (8-12 kW)	Part number
Eberspaecher Universal Diagnostic Tool (EUDT) 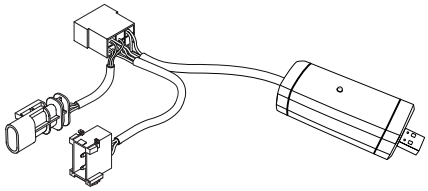 Cannot be used with the newer generation Ax2/Ax3 and Hx3 heaters							■	20.2800.70.1200
Diagnostic Fault Code Retriever 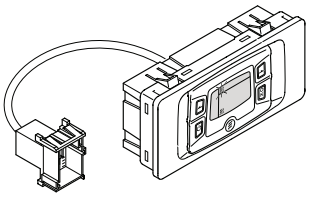 Can be used with first generation Airtronic and Hydronic heaters with a H-KIT ECU and for the second generation Hydronic and Hydronic M II heaters							■	20.2900.70.5060
Terminal Removal Tools 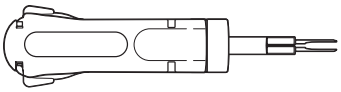 1.6 mm 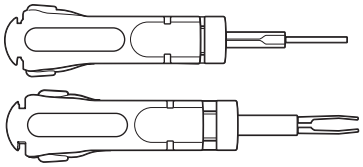 2.8 mm								
Micro-Timer AMP Order No. 0-0539960-1 — 1.6 mm	■	■	■	■	■	■	■	206.00.205
Junior Power timer AMP Order No. 1-1579007-6 — 2.8 mm	■	■	■	■	■	■	■	206.00.215
Wire Crimper 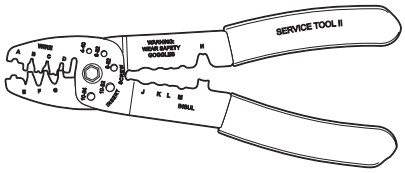								5670003
ECU (Control box) dismantling kit - for HS3 heaters 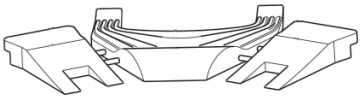 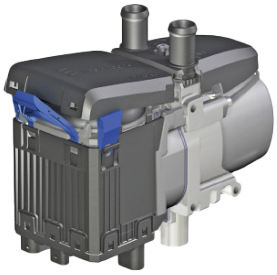					■			25.2652.81.0000

■ unrestricted use

FUEL SYSTEM

General information:

- Protect fuel lines, filters and metering pumps from impermissible heat levels; do not install near silencers or exhaust pipes.
- Take the rear axle suspension travel into account when installing fuel lines, fuel filters and metering pumps near the rear axle.
- When cutting fuel hoses and pipes, be sure to use a sharp knife.
- Cut surfaces must have no dents or burrs.
- Please also refer to the safety information on this section in the heater documentation.

FUEL SYSTEM

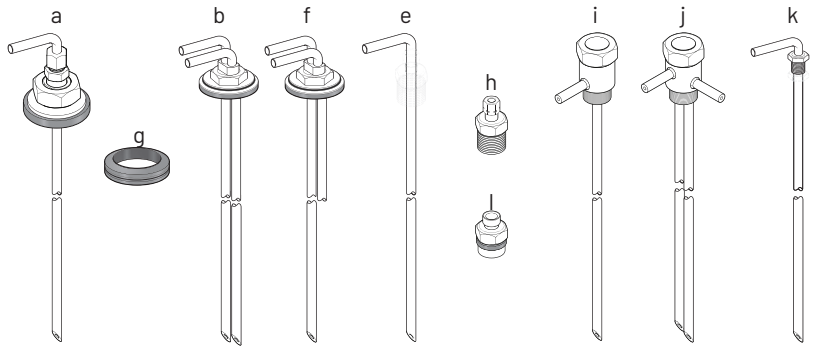

			Airtronic S (2.2 kW)	Airtronic M (4 kW)	Airtronic L (5.5 kW)	Airtronic XL3	Hydronic S3 (5-6 kW)	Hydronic L3 (16-35 kW)	Hydronic M-II (8-12 kW)	Part number
Single Pick-up Pipe 2.0 mm Universal		(Drill or 1/4" NPT fitting) (66 cm or 26")	■	■	■		■			20.2900.20.2010 a
Single Pick-up Pipe 2.0 mm	PREFERRED	(66 cm or 26")	■	■	■		■			20.2900.20.2042 e
Double Pick-up Pipe 2.0 mm		(56 cm or 22")	■	■	■		■			20.2900.20.2057 b
Fuel Pick-up pipe 2 mm W/FTNG		(59.5 cm or 23.5") - Vent fitting 1/2" NPT	■	■	■		■			20.2900.20.2004 i
Dual Vent Fuel Pick-up pipe 2.0 mm		(61 cm or 26") - Vent fitting 1/2" 14 NPT	■	■	■		■			20.2900.20.2007 j
Single Pick-up Pipe 4.0 mm universal		(Drill or 1/4" NPT fitting) (66 cm or 26")	■			■			■	20.2900.20.2050 a
Fuel Pick-up pipe 4 mm W/FTNG 19.5"		- Vent fitting 1/2" NPT	■			■			■	20.2900.20.4006 i
Single Pick-up Pipe 4.0 mm with Return		(61 cm or 24")						■		20.2900.20.2059 f
Compression Fitting 1/4" NPT	PREFERRED		■	■	■	■	■	■	■	20.2900.20.2044 h
Compression Fitting 3/8" NPT			■	■	■	■	■	■	■	5520002 h
Compression Fitting 1/2" NPT			■	■	■	■	■	■	■	5520006 h
Compression FTNG 3/4" NPT			■	■	■	■	■	■	■	20.2900.20.2082 h
Compression FTNG 9/16" w/O-ring			■	■	■	■	■	■	■	5520007 l
Rubber Seal Ring for Fuel Pick-up Pipe			■	■	■	■	■	■	■	20.2900.20.2026 g
Automotive Fuel Pick-up Assembly		(48 cm or 18.8")	■	■	■		■			22.1000.20.1100 k

NOTE:
The size of the fuel Pick-up is relative to the size of the heater

- 2-7 kw heater output requires a 2mm fuel Pick-up pipe
- 8-35 kw heater output requires a 4 mm fuel Pick-up pipe.

Tank connection

For cars with an inner tank pump

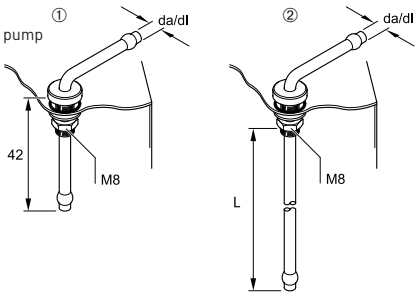

da = 4 mm, di = 2 mm			■	■	■		■			22.1000.20.1500 ①
da = 4 mm, di = 2 mm, L = 295 mm			■	■	■		■			22.1000.20.1600 ②

Tank connection with return

For commercial vehicles

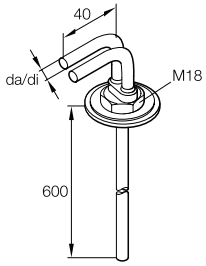

da = 6 mm, di = 4 mm								■		25.1226.89.4000

■ unrestricted use ~ restricted use

FUEL SYSTEM

		Airtronic S (2.2 kW)	Airtronic M (4 kW)	Airtronic L (5.5 kW)	Airtronic XL3	Hydronic S3 (5-6 kW)	Hydronic L3 (16-35 kW)	Hydronic M-II (8-12 kW)	Part number
Tank connection For commercial vehicles	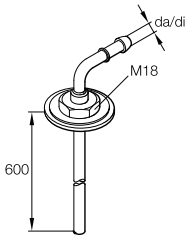								
	da = 6 mm, di = 2 mm	■	■	■		■			25.1226.89.5000
EasyFix tank connection For wall thicknesses from 2.8 to 3.5 mm	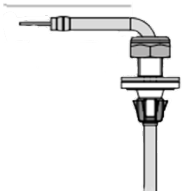								
	da = 4 mm, di = 2 mm	■	■	■		■			22.1000.20.4500
Fuel hose (linear m) Rubber *PME-compatible	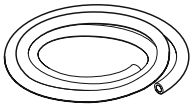								
	di = 3.5mm, D = 9.50 mm	■	■	■		■			360.75.300
	*di = 3.5 mm, D= 9.50 mm	■	■	■		■			360.75.400
	di = 5.0 mm, D = 11.0 mm	■	■	■	■	■	■		360.75.350
	* di = 5.0 mm, D = 11.0 mm	■	■	■	■	■	■		360.75.401
Tank Connection Kit For passenger cars with an inner tank pump	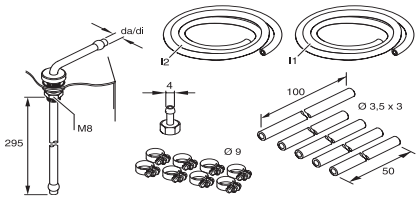								
	l1 = pipe D; L = 6 m/ l2 = pipe D 4x1; L=6 m / da =4 mm, di = 2 mm	■	■	■		■			22. 1000.20.1300
Fuel pipe (linear m) Plastic	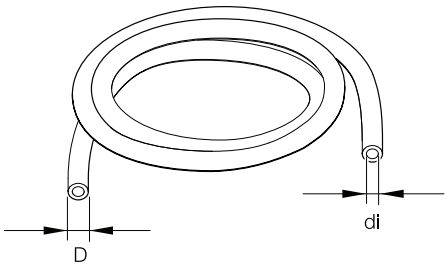								
	natural-colored, di = 1.5 mm x10.0m , D = 4 mm	■	■	■		■			20.2900.20.0067
	natural-colored, di = 1.5 mm x50.0m , D = 4 mm	■	■	■		■			20.2900.20.0068
	natural-colored, di = 1.5 mm x100.0m , D = 4 mm	■	■	■		■			20.2900.20.0069
	natural-colored, di = 1.5 mm x400.0m , D = 4 mm	■	■	■		■			20.2900.20.0070
	natural-colored, 2 mm x 0.8m , D = 4 mm	■	■	■		■			20.2900.20.0057
	natural-colored, 2 mm x 1.0m , D = 4 mm	■	■	■		■			20.2900.20.0030
	natural-colored, 2 mm x 1.7m , D = 4 mm	■	■	■		■			20.2900.20.0058
	natural-colored, 2 mm x 2.0m , D = 4 mm	■	■	■		■			20.2900.20.0050
	natural-colored, 2 mm x 3.0m , D = 4 mm	■	■	■		■			20.2900.20.0014
	natural-colored, 2 mm x 3.3m , D = 4 mm	■	■	■		■			20.2900.20.0023
	natural-colored, 2 mm x 4.3m , D = 4 mm	■	■	■		■			20.2900.20.0024
	natural-colored, 2 mm x 5.0m , D = 4 mm	■	■	■		■			20.2900.20.0013
	natural-colored, 2 mm x 6.0m , D = 4 mm	■	■	■		■			20.2900.20.0015
	natural-colored, 2 mm x 6.5m , D = 4 mm	■	■	■		■			20.2900.20.0046
	natural-colored, 2 mm x 8.0m , D = 4 mm	■	■	■		■			20.2900.20.0053
	natural-colored, 2 mm x 10.0m , D = 4 mm	■	■	■		■			20.2900.20.0060
	natural-colored, 2 mm x 50.0m , D = 4 mm	■	■	■		■			20.2900.20.0061
	natural-colored, 2 mm x 100.0m , D = 4 mm	■	■	■		■			20.2900.20.0062
	blue, di = 2 mm , D = 4 mm	■	■	■		■			890.31.054
	black, di = 2 mm , D = 6 mm	■	■	■		■		■	890.31.125
	blue, di = 4 mm , D = 6 mm				■		■		890.31.101
	4 x 1 (Sold in bulk by meter)								890.31.055
	4 x 1.25 (Sold in bulk by meter)								890.31.118

■ unrestricted use ~ restricted use

FUEL SYSTEM

		Airtronic S (2.2 kW)	Airtronic M (4 kW)	Airtronic L (5.5 kW)	Airtronic XL3	Hydronic S3 (5-6 kW)	Hydronic L3 (16-35 kW)	Hydronic M-II (8-12 kW)	Part number
Fuel Hose	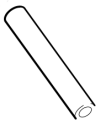 di = 3.5 mm, L = 50 mm	■	■	■		■		■	20.2900.20.0007
Fuel hose 105° elbow PME-compatible	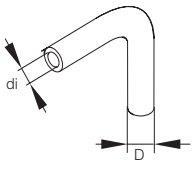 di = 3.5 mm, D = 9.5 mm	■	■	■		■		■	25.1888.80.0101
Fuel Line Adapter (to connect to Ax3 Heaters)	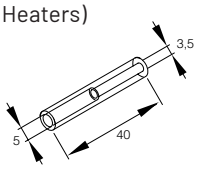 Outer diameter D = 10, 3.5mm to 5mm	■	■	■			■		25.1888.80.0102
Adapter	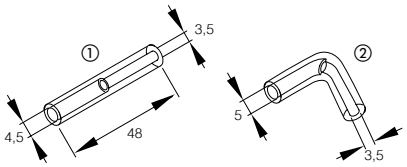 Outer diameter D = 10 mm	2) ■ 1) ■	■ ■	■ ■	■ ■	■ ■			22 1000 20 41 00 25.2635.05.0007
Adapter 105° elbow PME-compatible	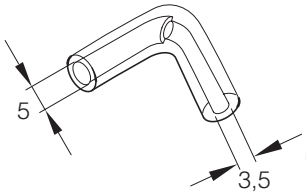 Outer diameter D = 10	■	■	■		■			25.2110.05.0301
Adapter for fuel pipes	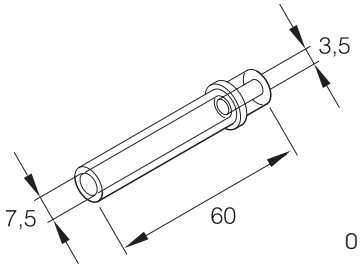 Outer diameter D = 12	■	■	■		■			22.1000.20.3000

■ unrestricted use ~ restricted use

FUEL SYSTEM

		Airtronic S (2.2 kW)	Airtronic M (4 kW)	Airtronic L (5.5 kW)	Airtronic XL3	Hydronic S3 (5-6 kW)	Hydronic L3 (16-35 kW)	Hydronic M-II (8-12 kW)	Part number
Fuel Filter	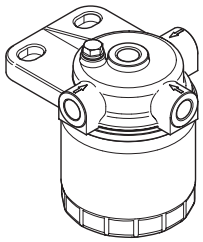 Fuel Filter						■		25.2599.05.0100
Clamp	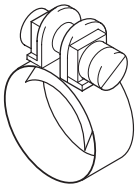 9 mm x 10 pc (used with 360 75 300)	■	■	■	■	■	■	■	20.2900.20.0063
	9 mm x 50 pc (used with 360 75 300)	■	■	■	■	■	■	■	20.2900.20.0064
	10 mm (used with 360 75 350)	■	■	■	■	■	■	■	10.2068.01.0098
	11 mm x 10 pc (used with 360 75 350)	■	■	■	■	■	■	■	20.2900.20.0065
	11 mm x 50 pc (used with 360 75 350)	■	■	■	■	■	■	■	20.2900.20.0066
	12 mm	■	■	■	■	■	■	■	10.2068.01.2098
	14 mm	■	■	■	■	■	■	■	10.2068.01.4098
Fuel filter with paper insert Plastic/installation in front of fuel circulation pump	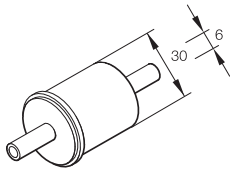	~	~	~	~	~	~	~	25.1156.20.0009
O-ring for fuel valve, 6mm suitable for 22.1000.20.2800		~	~	~	~	~		~	22.1000.20.2804

■ unrestricted use ~ restricted use

FUEL SYSTEM

	Airtronic S (2.2 kW)	Airtronic M (4 kW)	Airtronic L (5.5 kW)	Airtronic XL3	Hydronic S3 (5-6 kW)	Hydronic L3 (16-35 kW)	Hydronic M-II (8-12 kW)	Part number
Mounting bracket for metering pump and Flowtronic Water Pump 800 S (see page 76) Rubber 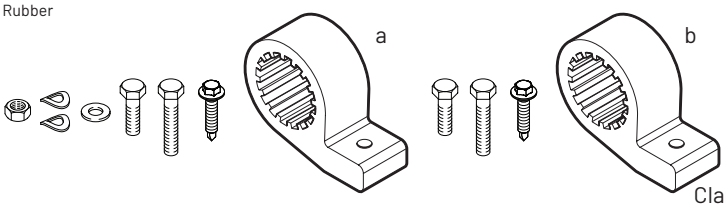								
Clamp 34 mm for FMP	■	■	■		■			152.00.200
Fuel, ø 34 mm	■	■	■		■		■	22.1000.50.0300 a
(For HS3 D6L coolant pump) Coolant, ø 41 mm				■	~		■	22.1000.50.0700 b
Fuel Metering Pump Holder 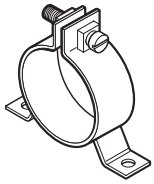							■	25.1156.20.0011
Fuel Connector Nipple and Nut 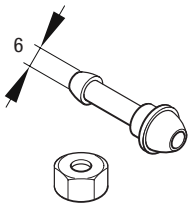						■		20.2900.20.2071
FMP Bracket PREFERRED 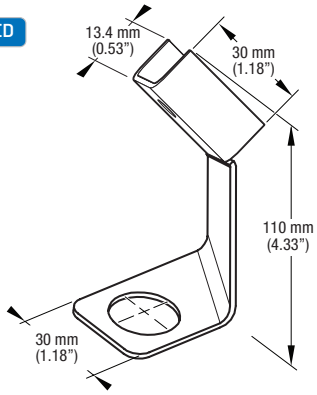	■	■	■				■	20.2900.40.0104
Mounting bracket for metering pump For use with boats and camping vehicles Recommended for mobile homes 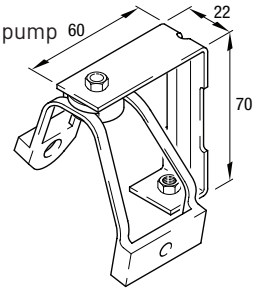						■		20.1634.80.0600

■ unrestricted use ~ restricted use

FUEL SYSTEM

		Airtronic S (2.2 kW)	Airtronic M (4 kW)	Airtronic L (5.5 kW)	Airtronic XL3	Hydronic S3 (5-6 kW)	Hydronic L3 (16-35 kW)	Hydronic M-II (8-12 kW)	Part number
Banjo fitting For Hydronic/Hydronic L II heaters	d = 5mm, D = 8mm								25.1352.88.0005
Plastic Fuel Filter with metal strainer For metering pumps with cup strainer Fuel filter suitable for use with fuel circulation pump only		■	■	■	■	■		■	25.1226.89.0037
Information Sticker		■	■	■	■	■	■	■	25.2652.05.0001
Fuel T-piece Plastic	d = 4mm, D = 8mm	~	~	~	~	~		~	262.31.155
	d = 6mm, D = 6mm	~	~	~	~	~		~	262.31.150
Pressure Reducer with cup strainer and hose fitting Input pressure 0.2 - 4 bar Control pressure min. 50 mbar, max. 150 mbar		■	■	■		■			22.1000.20.0800

■ unrestricted use ~ restricted use

MOUNTING PARTS

General information:

- The fastening parts supplied take account of all standard installation conditions.
- In installations in passenger cars and buses, the heater or its mount can usually be rigidly attached directly to the corresponding part of the body.
- By contrast, rubber-metal buffers need to be installed as vibration dampers in trucks and particularly in construction machinery. However, these must not be placed under tension or shear stress.
- This type of rubber-metal component also reduces structure-borne noise transmission. It is therefore used for installing both the heater and the metering pump on houseboats, for example.
- Please also refer to the safety information on this section in the heater documentation.

MOUNTING PARTS

			Airtronic S (2.2 kW)	Airtronic M (4 kW)	Airtronic L (5.5 kW)	Airtronic XL3	Hydronic S3 (5-6 kW)	Hydronic L3 (16-35 kW)	Hydronic M-II (8-12 kW)	Part number
Hose Clip ~= check connection diameter	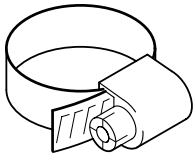	ø 16 - ø 25 mm ø 32 - ø 50 mm ø 33 - ø 57 mm ø 50 - ø 70 mm								10.2067.01.6025 10.2067.03.2050 5550001 5550004
Hose clip with lug = check connection diameter		ø 9 - ø 10.5 mm ø 21 - ø 24.0 mm								152.61.104 152.61.115
Hose Clip ~=check connection diameter		ø 9 mm ø 10 mm ø 11 mm ø 12 mm ø 14 mm								10.2068.00.9098 10.2068.01.0098 10.2068.01.1098 10.2068.01.2098 10.2068.01.4098
Pipe clip for exhuast pipe	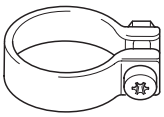	ø 26 - ø 28 mm ø 32 - ø 34 mm								22.1000.51.4400 22.1000.51.4500
Pipe clip for exhuast pipe	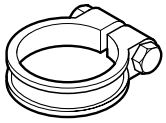	ø 42 - ø 45 mm								152.09.004
Holder for metering pump and Flowtronic 800 S water pump Rubber	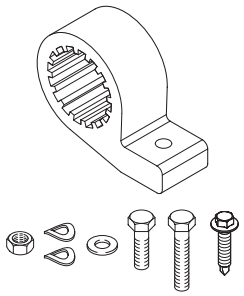	ø 34 mm ø 41 mm	■	■	■	■		■		22.1000.50.0300 22.1000.50.0700

■ unrestricted use ~ restricted use

MOUNTING PARTS

		Airtronic S (2.2 kW)	Airtronic M (4 kW)	Airtronic L (5.5 kW)	Airtronic XL3	Hydronic S3 (5-6 kW)	Hydronic L3 (16-35 kW)	Hydronic M-II (8-12 kW)	Part number
Air hose fastening kit Plastic(3 pcs.)	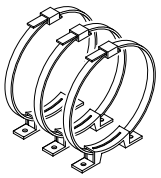								
	ø 60 - ø 100 mm								22.1000.50.0200
Clip Galvanized									
	ø 28 mm								152.09.010
	ø 28 mm x 10 pc								20.2900.90.0001
	ø 28 mm x 50 pc								20.2900.90.0005
Do not use for flexible exhaust pipes!	ø 41 mm								152.10.039
	ø 50 mm								152.09.011
Clip Stainless steel	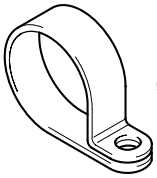								
	ø 25 mm (for 22 mm Exhaust/ Air Intake)								152.10.048
	ø 34 mm (for 30mm Exhaust)								152.09.008
Pipe clip with rubber inlay	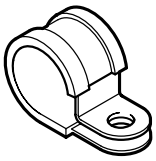								
	ø 10 mm								152.00.139
Fastening Clip for water hoses, ø 15 mm - ø 20 mm a Holder	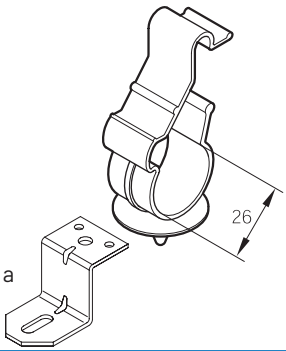								156.31.011
Stainless Steel Hose Clamp									
	46-70 mm (60 mm or 2.4" Ducting)	■							5550004
	59-83 mm (75 mm or 3" Ducting)	■	■	■					5550002
	84-108 mm (100 mm or 4" Ducting)	~	~	■	■				5550003

■ unrestricted use ~ restricted use

MOUNTING PARTS

			Airtronic S (2.2 kW)	Airtronic M (4 kW)	Airtronic L (5.5 kW)	Airtronic XL3	Hydronic S3 (5-6 kW)	Hydronic L3 (16-35 kW)	Hydronic M-II (8-12 kW)	Part number
Rubber grommet	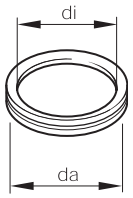	di = 4 - 10 mm , da = 16.5 mm								20.1280.09.0103
Gasket for exhaust pipe	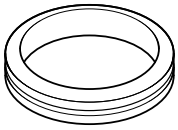	di = 41 mm								20.8542.11.0002
Grommet for exhuast pipe	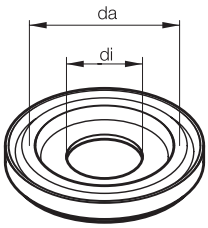	di = 23-30 mm, da = 41 mm di = 38 - 45 mm, da = 60 mm								25.1216.88.0301 20.1282.20.0002
Rubber - metal buffer	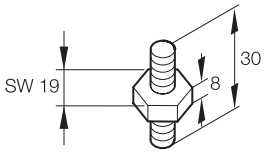	Thread 2 x M6 x 11 mm								20.1185.00.0001

unrestricted use ~ restricted use

MOUNTING PARTS

		Airtronic S (2.2 kW)	Airtronic M (4 kW)	Airtronic L (5.5 kW)	Airtronic XL3	Hydronic S3 (5-6 kW)	Hydronic L3 (16-35 kW)	Hydronic M-II (8-12 kW)	Part number
Rubber - metal buffer	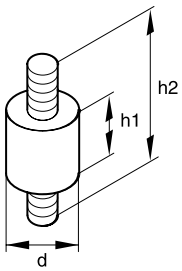								
	Thread 2 x M8 x 13, d = 30 mm, h1 = 15 mm, h2 = 41 mm 1 inch H, Round Body, 5/16 x 18 NC								330.09.002 5540014
Installation frame for EasyStart Timer and Pro (TP7)	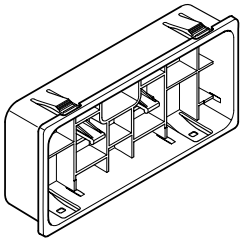								22.1000.51.4100
Spacer plater Rubber	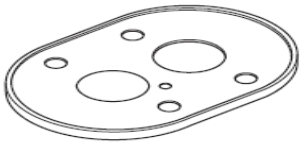								
	Flange seal								25.2069.01.0002
Device holder suitable for Airtronic L ~= only for Airtronic L3	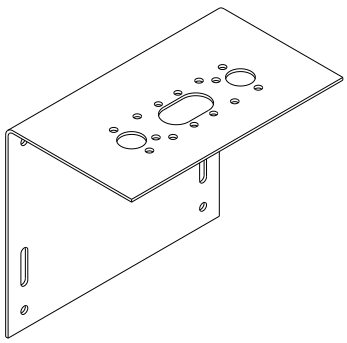			~	■				22.1000.51.5200

■ unrestricted use ~ restricted use

MOUNTING PARTS

	Airtronic S (2.2 kW)	Airtronic M (4 kW)	Airtronic L (5.5 kW)	Airtronic XL3	Hydronic S3 (5-6 kW)	Hydronic L3 (16-35 kW)	Hydronic M-II (8-12 kW)	Part number
Mounting Plate with Seal 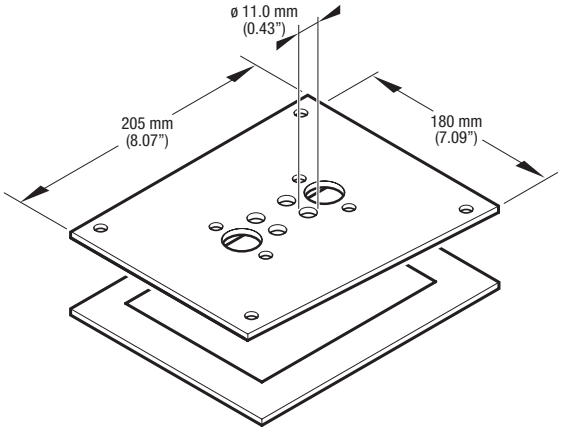			■	■				20.2900.40.0032
	■	■						5540001
Mounting Plate 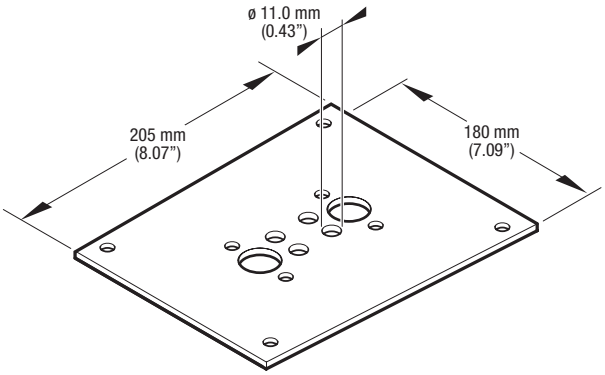	■	■						20.2900.40.0025
Side Frame Mounting Tray for Boxed Heaters 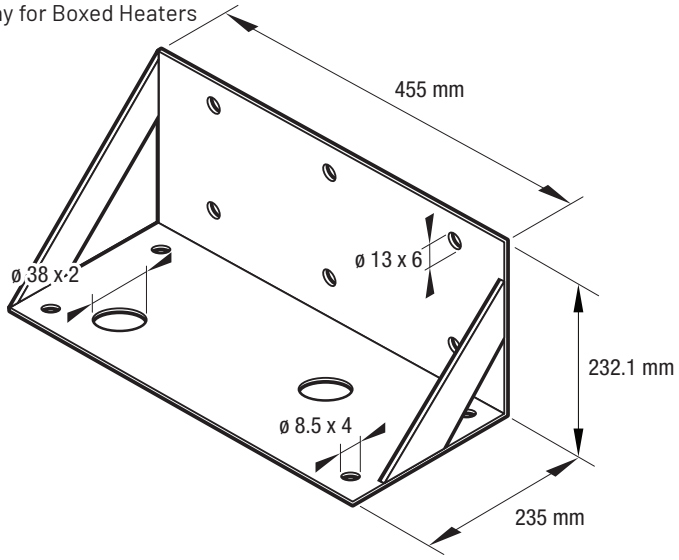							E	20.2900.40.0075

■ unrestricted use ~ restricted use E E-Guardian

MOUNTING PARTS

	Airtronic S (2.2 kW)	Airtronic M (4 kW)	Airtronic L (5.5 kW)	Airtronic XL3	Hydronic S3 (5-6 kW)	Hydronic L3 (16-35 kW)	Hydronic M-II (8-12 kW)	Part number
Angle Bracket for Airtronic D5								
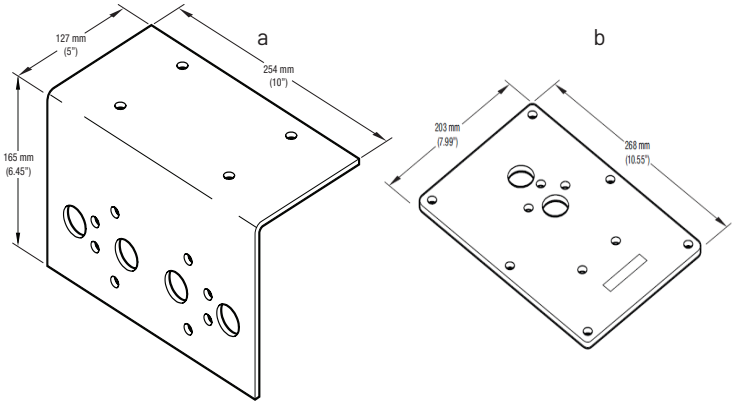			■					20.2900.40.0023 a
			■					20.2800.40.0500 b
Mounting Bracket 90°								
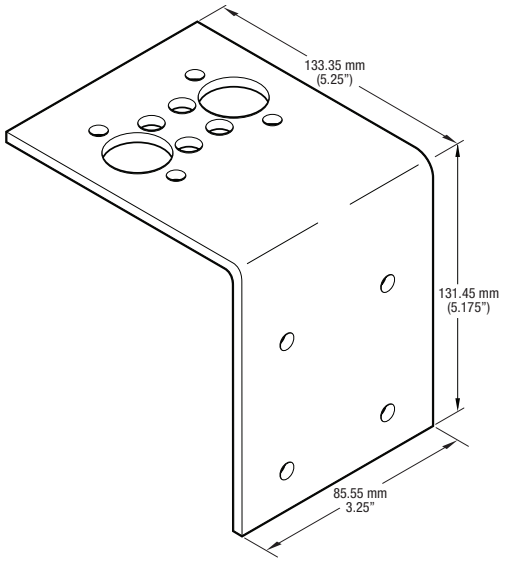	■	■						5540016
Metal Angle Bracket for Fuel Metering Pump								
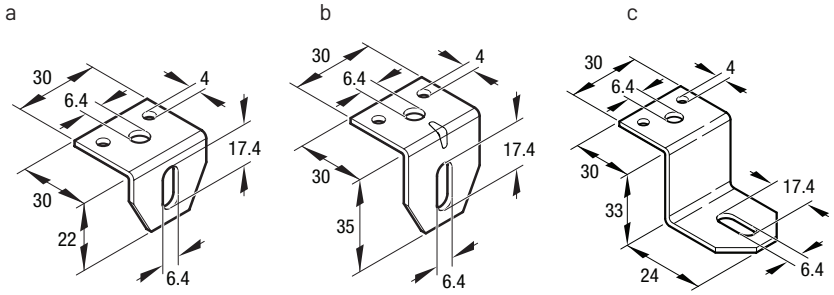	■	■	■	■	■	■	■	20.1348.03.0002 a
	■	■	■	■	■	■	■	20.1348.03.0004 b
	■	■	■	■	■	■	■	20.1533.88.0007 c

■ unrestricted use ~ restricted use

MOUNTING PARTS

		Airtronic S (2.2 kW)	Airtronic M (4 kW)	Airtronic L (5.5 kW)	Airtronic XL3	Hydronic S3 (5-6 kW)	Hydronic L3 (16-35 kW)	Hydronic M-II (8-12 kW)	Part number
Mounting bracket for Hydronic S3 D5E	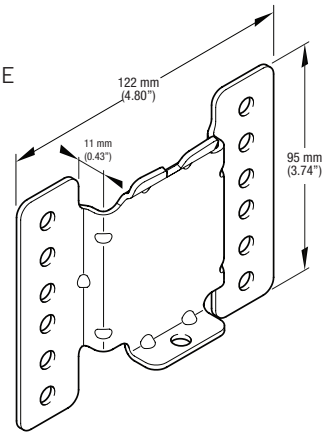					■			22.1000.51.4200
Mounting bracket for Hydronic II D5E a special screw also required for Economy/comfort 25.2526.80.0101	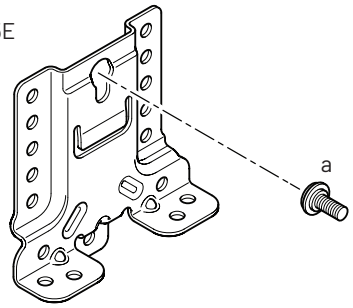								22.1000.51.3700
Water Pump Bracked a Special screw also required: for Economy / Comfort 25 2526 80 01 01	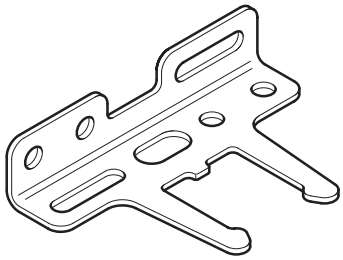					■			22.1000.51.3900
Mounting bracket for Hydronic S3 Commercial (24 V)	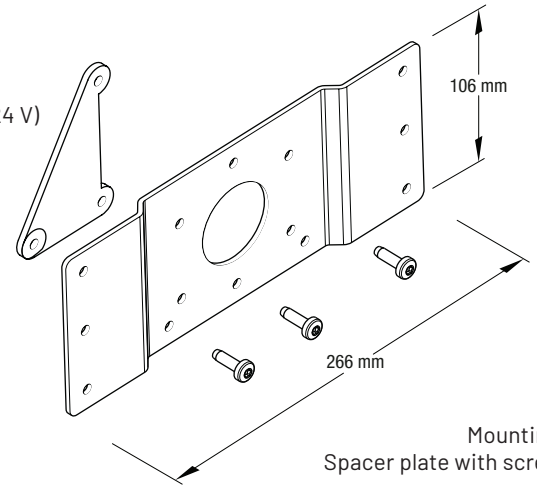					~			22.1000.51.5000
Mounting bracket Spacer plate with screws M6×20						~			22.9000.51.5100

■ unrestricted use ~ restricted use

MOUNTING PARTS

	Airtronic S (2.2 kW)	Airtronic M (4 kW)	Airtronic L (5.5 kW)	Airtronic XL3	Hydronic S3 (5-6 kW)	Hydronic L3 (16-35 kW)	Hydronic M-II (8-12 kW)	Part number	
Mounting Bracket 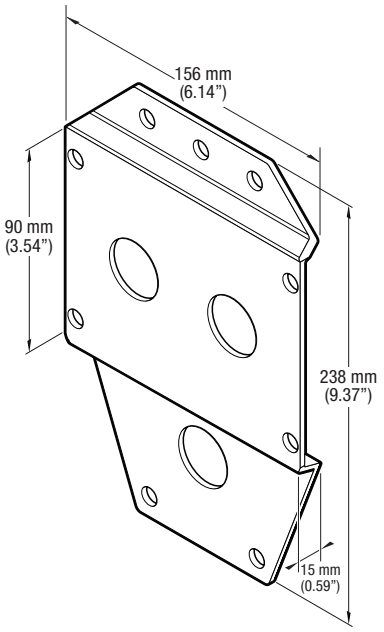							■	25.1816.80.0001	
HS3 Box 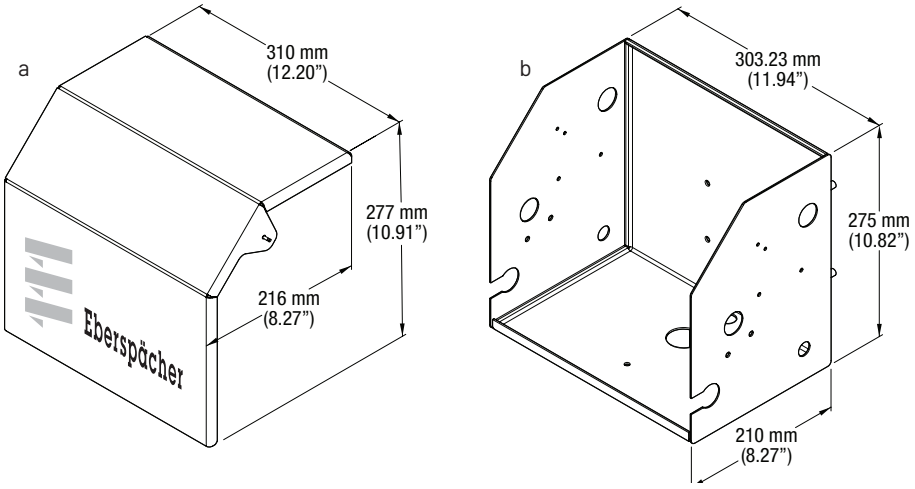									
HS3 Box Lid					■			25.2800.40.0529	a
HS3 Enclosure Base					■			25.2800.40.0528	b
HS3 Box Screw, Nut & Washer 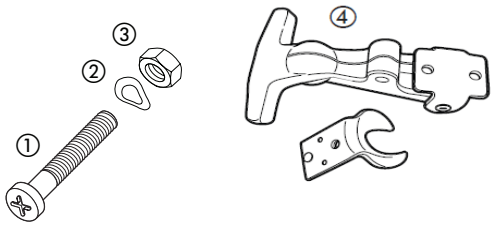									
Screw. phil. head m3x10					■			5590024	a
M3 wave washer din137					■			5590117	b
Nut 3mm					■			5590069	c
Southco latches								5520059	d

■ unrestricted use ~ restricted use E E-Guardian

MOUNTING PARTS

	Airtronic S (2.2 kW)	Airtronic M (4 kW)	Airtronic L (5.5 kW)	Airtronic XL3	Hydronic S3 (5-6 kW)	Hydronic L3 (16-35 kW)	Hydronic M-II (8-12 kW)	Part number
M-II Box								
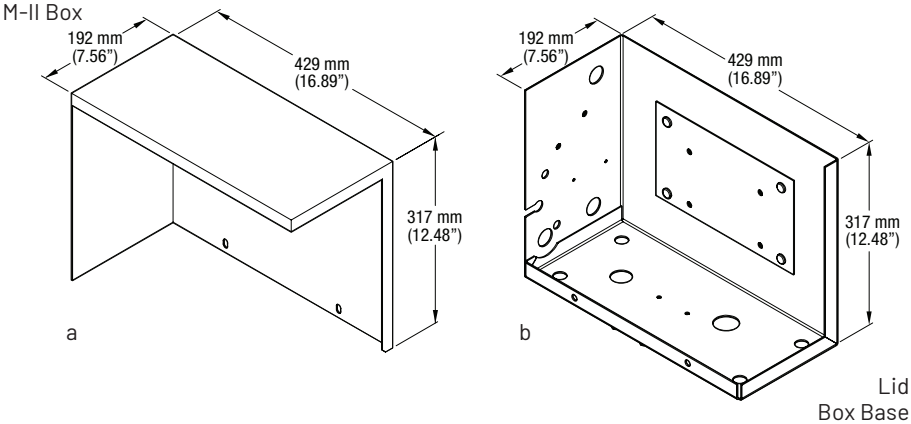								
Lid							E	25.2800.40.1003 a
Box Base							E	25.2800.40.1002 b
L2 Enclosure Lid								
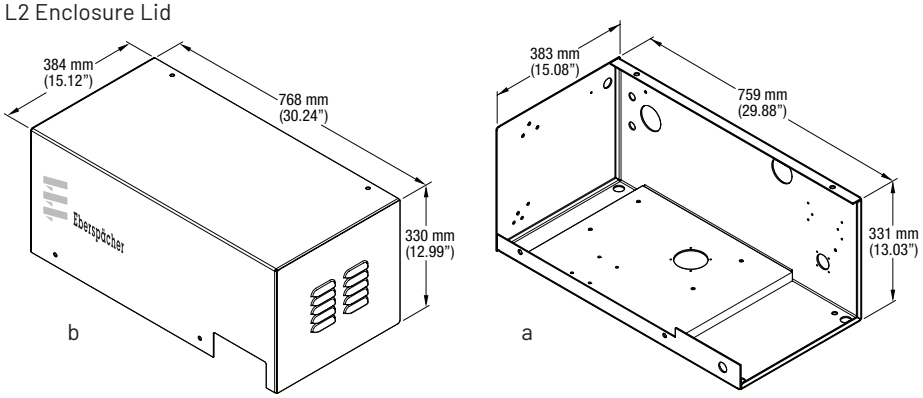								
Lid								25.2800.40.1022 b
Box Base								25.2800.40.1021 a
M-II Box								
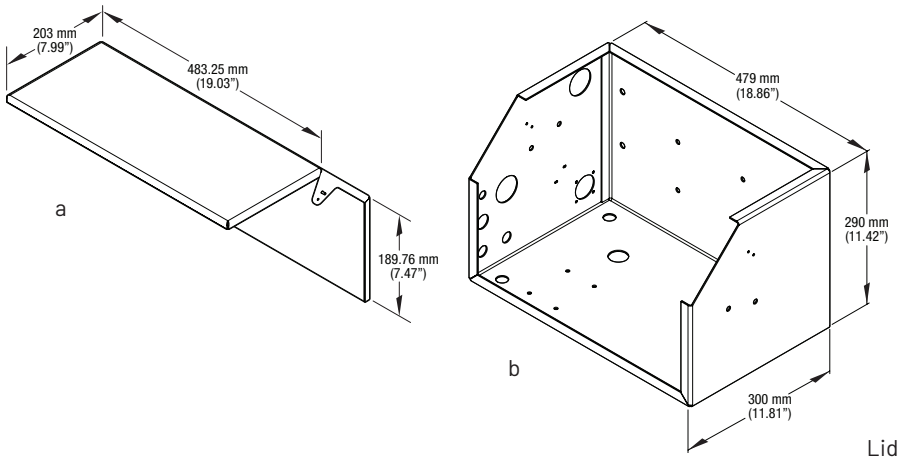								
Lid								25.2800.40.1026 a
Box Base								25.2800.40.1025 b

unrestricted use ~ restricted use E E-Guardian

MOUNTING PARTS

	Airtronic S (2.2 kW)	Airtronic M (4 kW)	Airtronic L (5.5 kW)	Airtronic XL3	Hydronic S3 (5-6 kW)	Hydronic L3 (16-35 kW)	Hydronic M-II (8-12 kW)	Part number
ECHO 6/8								
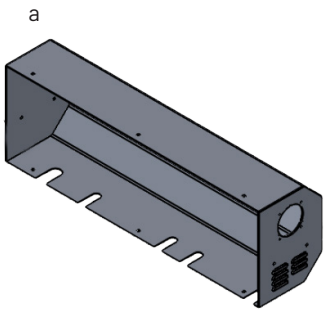 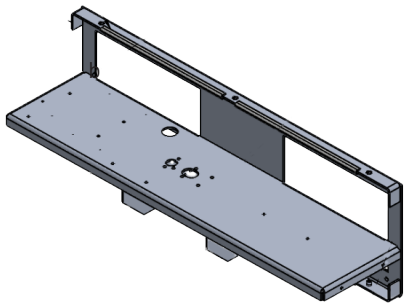								
Lid			■	■				20.2900.40.0602 [a]
Box Base			■	■				20.2900.40.0601 [b]
Mounting Bracket			■	■				20.2900.40.0603
ECHO 5								
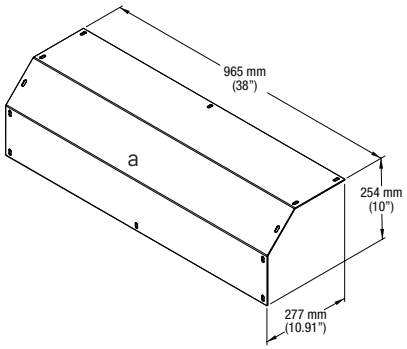 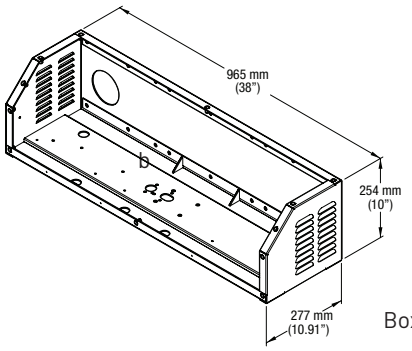								
Lid								20.2900.40.0506 [a]
Box Base								20.2900.40.0502 [b]

ELECTRICAL PARTS

General information:

- Using a timer you can manually or automatically switch on the heater at a preset time (pre-heating mode).
- Always make sure that a heater can run on, even if the vehicle's whole electrical system can be shut down with a battery main switch (special electrical circuit or clear instruction).
- The rule of thumb for the electrical power supply is: charging time = heating time.
- In certain circumstances, heaters in motor homes or commercial vehicles are operated for longer sustained periods. In these cases, the on-board energy resources need to be monitored.
- For more detailed information, see technical description and installation instructions.
- Please also refer to the safety information on this section in the heater documentation.

ELECTRICAL PARTS

	Airtronic S (2.2 kW)	Airtronic M (4 kW)	Airtronic L (5.5 kW)	Airtronic XL3	Hydronic S3 (5-6 kW)	Hydronic L3 (16-35 kW)	Hydronic M-II (8-12 kW)	Part number
Modular cable bundles for the combination of several heaters and/or when there is a large distance between the heater and the control element (e.g., in recreational vehicles, boats, or buses) Modular cable harness AX2_AX3 12V_24V Details: Alternative cable harness for Airtronic 2 and Airtronic 3 heaters, especially suitable for individually installed units, e.g., when there is a large distance between a heater and control unit or heaters are combined. To connect a CAN control unit, 20 2900 70 0014 is required. For connection to another heater cable harness from the modular series, 20 2900 70 0015 is required. 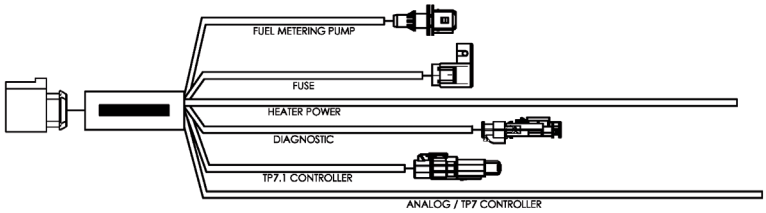	■	■	■	■				20.2900.70.0012
Modular cable harness HS3 CS 12V_24V Details: Alternative cable harness for Hydronic S3 (CS) heaters, especially suitable for individually installed units, e.g., when there is a large distance between a heater and control unit or heaters are combined. For 12 V heaters, 20 2900 70 0016 is also required. For 24 V heaters, 20 2900 70 0018 is also required. To connect a CAN control unit, 20 2900 70 0014 is required. For connection to another heater cable harness from the modular series, 20 2900 70 0015 is required. 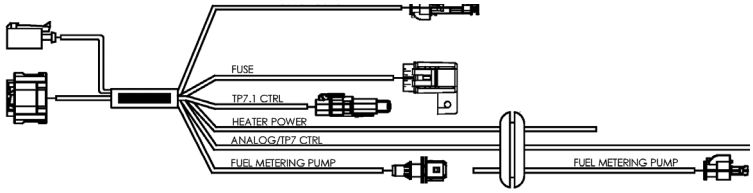					■			20.2900.70.0013
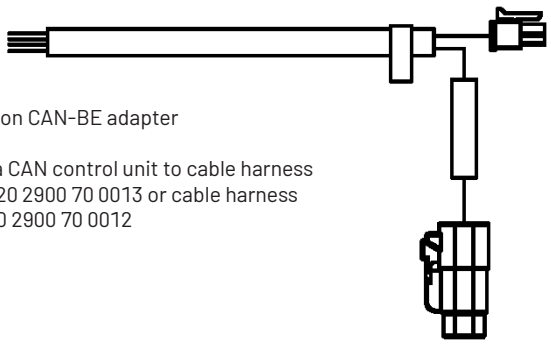 Modular line section CAN-BE adapter Info: To connect a CAN control unit to cable harness HS3 CS 12V_24V 20 2900 70 0013 or cable harness AX2/3 12V_24V 20 2900 70 0012 Length 7,300 mm	■	■	■	■	■			20.2900.70.0014

■ unrestricted use ~ restricted use

ELECTRICAL PARTS

	Airtronic S (2.2 kW)	Airtronic M (4 kW)	Airtronic L (5.5 kW)	Airtronic XL3	Hydronic S3 (5-6 kW)	Hydronic L3 (16-35 kW)	Hydronic M-II (8-12 kW)	Part number
Harness adapter for combo kits For connecting two heaters to modular cable harnesses. Length 9,100 mm / 6.2′ 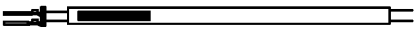	■	■	■	■				20.2900.70.0015
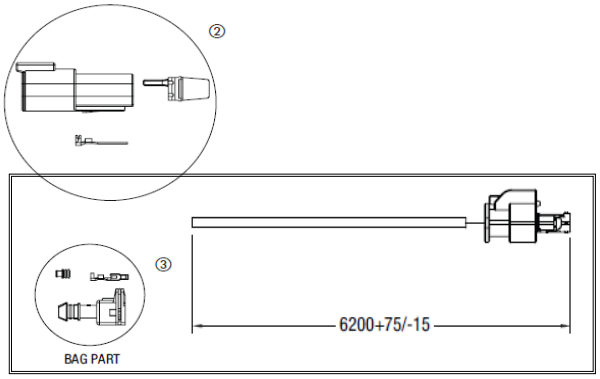 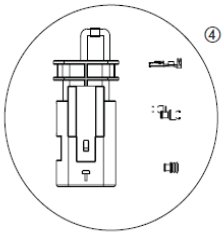								
Deutsch connector, 4 way 2)	■	■			■			20.2900.70.0019
AX2 / HS3 FMP Harness 3)	■	■			■			20.2900.70.0020
Diagnostic Cap 4)	■	■			■			20.2900.70.0022
Line section 12V WP 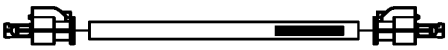 Required if using modular cable harness HS3 CS 12V_24V 20 2900 70 0013 for a 12 V heater. Length 1,525 mm / 5′					■			20.2900.70.0016
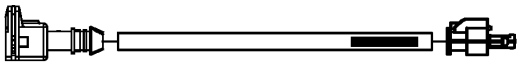 Line section 24V WP Required if using modular cable harness HS3 CS 12V_24V 20 2900 70 0013 for a 24 V heater. Length 1,525 mm / 5′					■			20.2900.70.0018
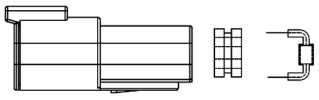 CAN bus terminating plug  For use with modular cable harness HS3CS12V_24V 20 2900 70 0013 and modular cable harness AX2_AX3 12V_24V 20 2900 70 0012	■	■	■	■	■			20.2900.70.0017

■ unrestricted use ~ restricted use

ELECTRICAL PARTS

		Airtronic S (2.2 kW)	Airtronic M (4 kW)	Airtronic L (5.5 kW)	Airtronic XL3	Hydronic S3 (5-6 kW)	Hydronic L3 (16-35 kW)	Hydronic M-II (8-12 kW)	Part number
Voltage divider for fan control – single part Connector block (Base Relay 5 Pin)	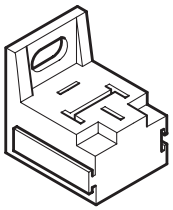								203.00.085
Smart IPCU retrofit kit	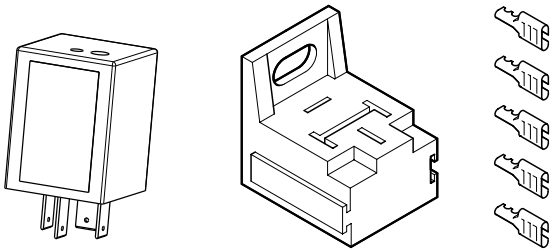					~			24.8800.00.0077
Relay	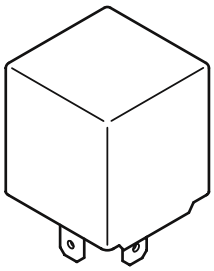								203.00.097 203.00.066

Changeover contact Max. current consumption 40 A - 12v 24v Inc Diode

~ = for Hydronic S3 Economy 12V (CL and

unrestricted use ~ restricted use

ELECTRICAL PARTS

	Airtronic S (2.2 kW)	Airtronic M (4 kW)	Airtronic L (5.5 kW)	Airtronic XL3	Hydronic S3 (5-6 kW)	Hydronic L3 (16-35 kW)	Hydronic M-II (8-12 kW)	Part number
IPCU adapter cable for EDiTH Basic					~	~		22.1000.32.7400
Triple fuse holder with pin With 5 A, 15 A, 25 A fuses plus fastening parts								22.1000.31.0600

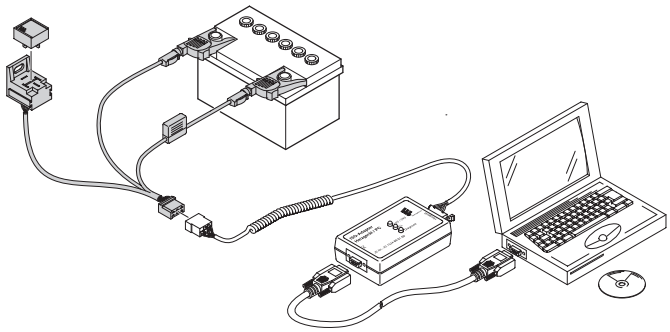

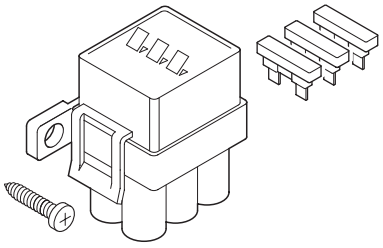

unrestricted use ~ restricted use

ELECTRICAL PARTS

		Airtronic S (2.2 kW)	Airtronic M (4 kW)	Airtronic L (5.5 kW)	Airtronic XL3	Hydronic S3 (5-6 kW)	Hydronic L3 (16-35 kW)	Hydronic M-II (8-12 kW)	Part number	
Terminals 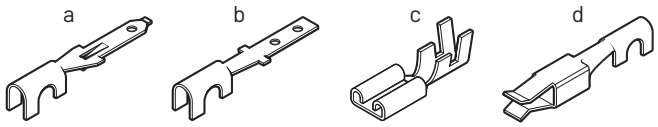	10ga - 12ga Female, Tabs								5670174	c
	14ga - 18ga Female, Tabs								5670394	c
	Mini Terminal, AWG 16-20								206.00.180	d
	10ga - 12ga Male								5670176	a
	14ga - 18ga Male								5670175	a
	Mini Terminal, AWG 16-20								206.36.018	b
	Mini Terminal, AWG 14-18								206.00.182	d
	Terminal 12033997L								5670199	c
Terminal FE Faston - 18/22 AWG 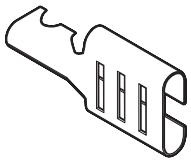									5670395	
Ring Terminal 	(3/8") AWG 10-12								5670178	
Plug and Socket Connector 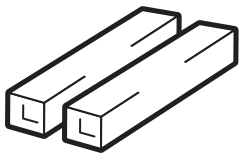									206.00.040	

unrestricted use ~ restricted use

TERMINALS AND CONNECTORS

		Airtronic S (2.2 kW)	Airtronic M (4 kW)	Airtronic L (5.5 kW)	Airtronic XL3	Hydronic S3 (5-6 kW)	Hydronic L3 (16-35 kW)	Hydronic M-II (8-12 kW)	Part number	
Socket Housing, Male	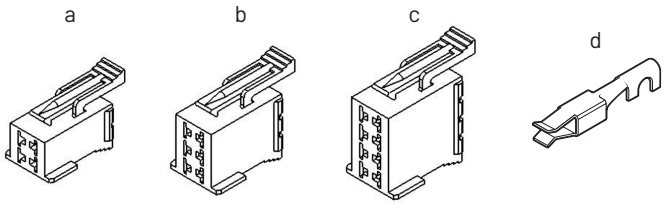									
	4 Pin								206.31.296	a
	6 Pin								206.31.297	b
	8 Pin								206.31.298	c
	Terminal, Female AWG 16-20								206.00.180	d
Socket Housing, Female	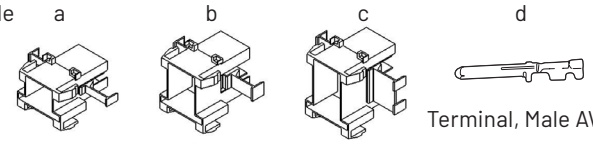									
	4 Pin								206.31.100	a
	6 Pin								206.31.106	b
	8 Pin								206.31.101	c
	Terminal, Male AWG 16-20								206.36.018	d
Socket Housing	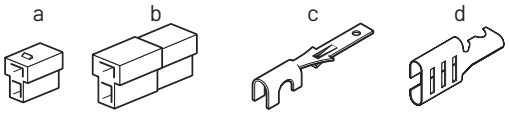									
	Male 2 Pin "T"								206.00.099	a
	Female 2 Pin "T"								206.31.004	b
	Flat Term & Tab AWG 10-12 for 20631004								5670176	c
	Terminal w/Tab 18-14 for 20600099								5670394	d
Fuel Metering Pump Housing Kit for metering pump, with contacts and seals	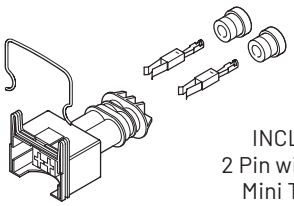									
	INCLUDES: terminals and seals.								22.1000.31.8700	
	2 Pin with Spring (FMP Connection)								206.31.290	
	Mini Terminal, Female AWG 16-20								206.00.180	
Housing 2W REC MCON 1.2 Ax2/HS3 FMP	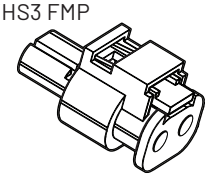									
									206.31.294	
FMP Connector Kit for Hydronic S3 and Airtronic	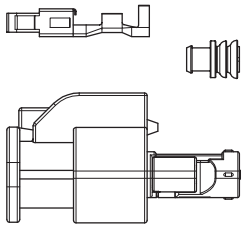									
	INCLUDES: terminals and seals.								25.2800.90.0054	

■ unrestricted use ~ restricted use

TERMINALS AND CONNECTORS

	Airtronic S (2.2 kW)	Airtronic M (4 kW)	Airtronic L (5.5 kW)	Airtronic XL3	Hydronic S3 (5-6 kW)	Hydronic L3 (16-35 kW)	Hydronic M-II (8-12 kW)	Part number
Hydronic M Square Connector 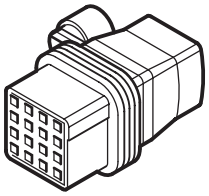 Socket Housing M Stribel Ctrl Connector with pins								206.31.319 22.1000.31.9300
Socket Housing, 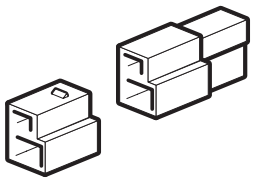 2 Pin with Spring (FMP Connection) Mini Terminal, Female AWG 16-20 Socket Housing M Stribel Control Plug for 206 31 319 Stribel								206.31.290 206.00.180 206.31.319 206.75.042
EasyStart Timer - Single part electrical connection 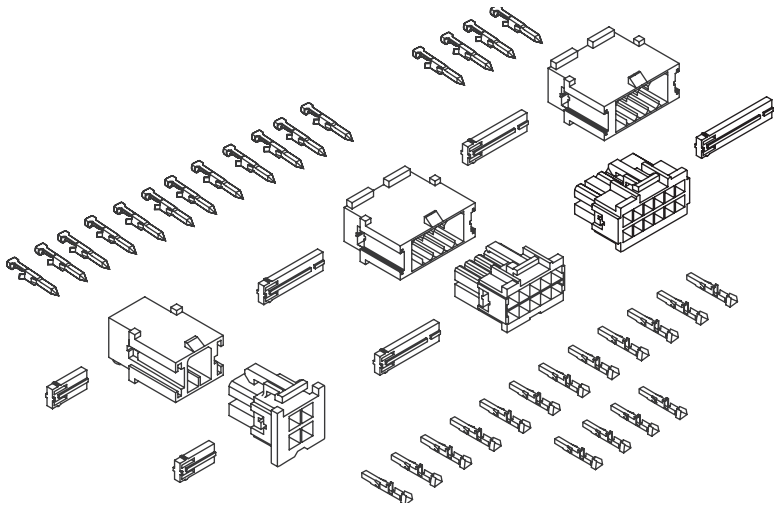								22.1000.34.2600

unrestricted use ~ restricted use

POWER CONVERTERS 12V TO 24V

Power Converter 12 - 24 480 W

5673601

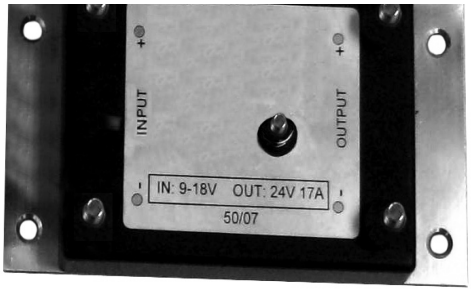

EXHAUST

General information:

The exhaust and combustion air system must be installed in such a way that it ensures the following:

- The connection to the heater plug is sealed.
- The mouth of the pipe is never facing a head wind.
- As far as possible, the mouth of the pipe is protected from spray water ingress and spray must be able to run straight out again without penetrating the heater.
- There is no possibility of heater or vehicle engine exhaust gases being sucked in.
- Please also refer to the safety information on this section in the heater documentation.

Installing the exhaust line:

- Exhaust pipes should always be installed at downward angle towards the mouth of the pipe.
- If this is not possible, a water drainage hole must be drilled at the lowest point.
- If this point is not in the open air (e.g. in a ship's engine room), this opening must have a sealed connection to an overflow vessel.
- Under no circumstances must any cross-sections in the exhaust line be narrower than those on the heater exhaust connection.
- For permissible lengths, diameters and curvatures in the combustion-air and exhaust lines, see the technical information and installation instructions.

EXHAUST

		Airtronic S (2.2 kW)	Airtronic M (4 kW)	Airtronic L (5.5 kW)	Airtronic XL3	Hydronic S3 (5-6 kW)	Hydronic L3 (16-35 kW)	Hydronic M-II (8-12 kW)	Part number
Exhaust pipe elbow	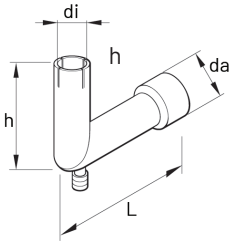								
	with condensate hole, di = 24 mm, da = 24 mm	■	■	■		■			24.0076.07.0100
	without condensate hole, di = 24 mm, da = 24 mm	■	■	■		■			24.0172.01.0100
Exhaust pipe elbow	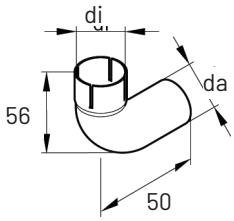								
	di = 24 mm, da = 24 mm	■	■	■		■			25.2481.80.0202
Elbow for combustion air Plastic	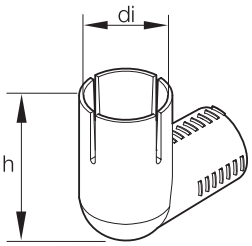								
	di = 20 mm, h = 45 mm						■		22.1000.40.0002
	di = 25 mm, h = 50 mm	■	■	■	■				22.1000.40.0001
Elbow	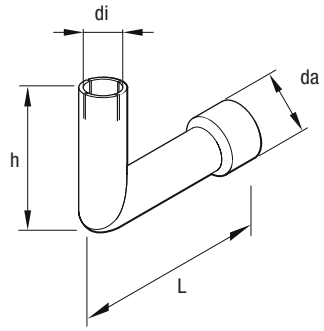								
	di = 24, da = 30 mm, h = 50 mm, L = 80 mm	■	■	■		■			25.1226.89.5500

■ unrestricted use ~ restricted use

EXHAUST

	Airtronic S (2.2 kW)	Airtronic M (4 kW)	Airtronic L (5.5 kW)	Airtronic XL3	Hydronic S3 (5-6 kW)	Hydronic L3 (16-35 kW)	Hydronic M-II (8-12 kW)	Part number
Exhaust connection								
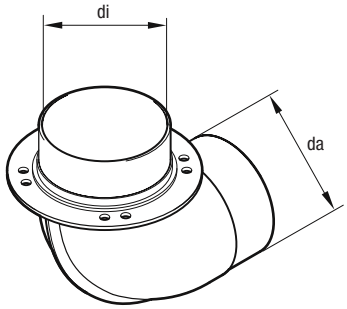 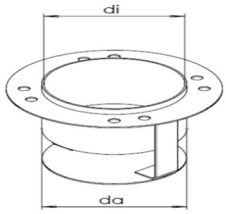 Exhaust connection di = 70 mm, da = 72 mm						■		22.1000.40.0400
Exhaust Elbow di = 70 mm, da = 72 mm						■		22.1000.40.0300
Straight Exhaust Fitting								
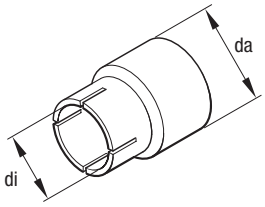 di = 24, da = 30 mm	■	■	■		■			25.1520.80.0101
Exhaust 90° adapter								
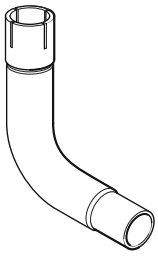 di = 30 mm							■	25.2800.30.1000

■ unrestricted use ~ restricted use

EXHAUST

Flexible Stainless Steel Exhaust PREFERRED

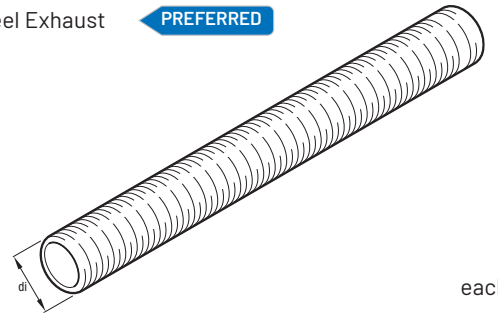

Flexible Stainless Steel Exhaust

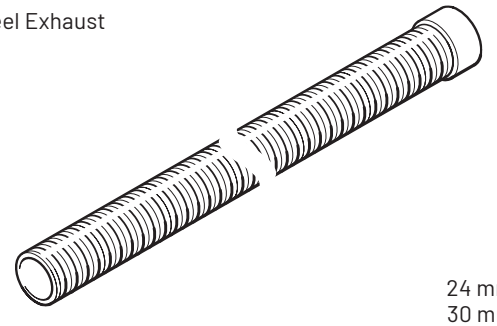

Flexible Stainless Steel Exhaust

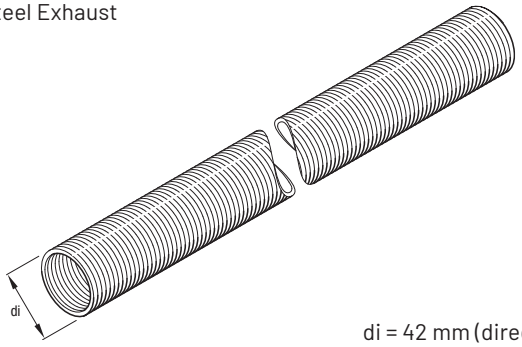

Flexible Stainless Steel Exhaust

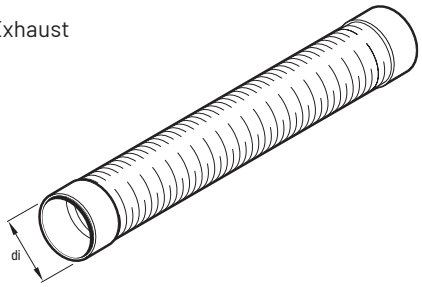

	Airtronic S (2.2 kW)	Airtronic M (4 kW)	Airtronic L (5.5 kW)	Airtronic XL3	Hydronic S3 (5-6 kW)	Hydronic L3 (16-35 kW)	Hydronic M-II (8-12 kW)	Part number
each - di = 24mm (1.3 mtr)	■	■	■		■			360.61.557
24 mm x 1.0 M with end cap	■	■	■		■			25.1774.80.0200
30 mm x 1.3 M with end cap							■	25.1816.80.0800
di = 42 mm (direct connect) - per mtr				■				5530013
di = 24 mm (one layer) - per mtr	■	■	■		■			360.61.550 PREFERRED
di = 24 mm (two layer) - per mtr	■	■	■		■			360.61.299
di = 30 mm (one layer) - per mtr							■	360.61.580
di = 30 mm (two layers) - per mtr							■	360.61.300
di = 70 mm (direct connect) - per mtr						■		5530015

■ unrestricted use ~ restricted use

EXHAUST

Exhaust Muffler

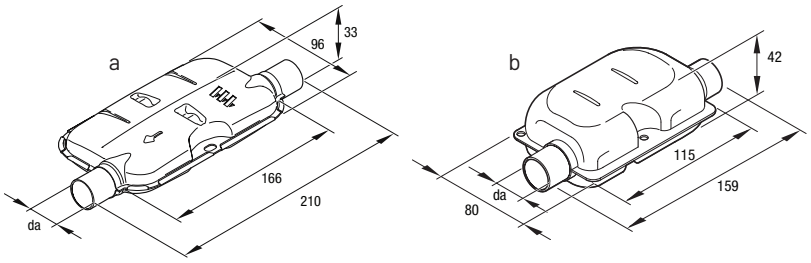

	Airtronic S (2.2 kW)	Airtronic M (4 kW)	Airtronic L (5.5 kW)	Airtronic XL3	Hydronic S3 (5-6 kW)	Hydronic L3 (16-35 kW)	Hydronic M-II (8-12 kW)	Part number
for 24mm (Slimmer-New)	■	■	■		■			22.1000.40.0900 a
for 24mm (Wider-Old)	■	■	■		■			25.1864.81.0100 b

Exhaust Muffler (For Boat)

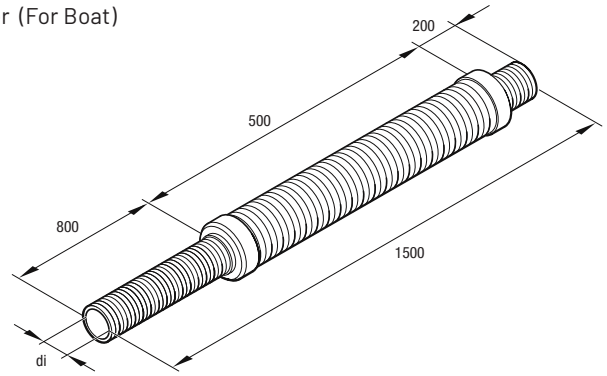

	Airtronic S (2.2 kW)	Airtronic M (4 kW)	Airtronic L (5.5 kW)	Airtronic XL3	Hydronic S3 (5-6 kW)	Hydronic L3 (16-35 kW)	Hydronic M-II (8-12 kW)	Part number
di = 30 mm	~	~	~		~		■	25.1226.89.5800

Exhaust Muffler

The exhaust silencer must not be installed in boat interiors.

Holder for exhaust silencer, see page 70

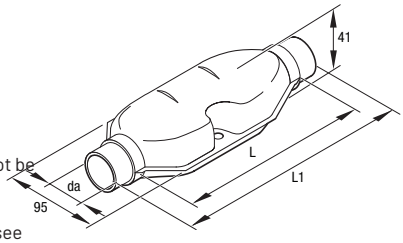

	Airtronic S (2.2 kW)	Airtronic M (4 kW)	Airtronic L (5.5 kW)	Airtronic XL3	Hydronic S3 (5-6 kW)	Hydronic L3 (16-35 kW)	Hydronic M-II (8-12 kW)	Part number
da = 30 mm, L = 180 mm, L1 = 224 mm			■		■			25.1806.80.0100

Exhaust Silencer

The exhaust silencer must not be installed in boat interiors.

Holder for exhaust silencer, see page 70

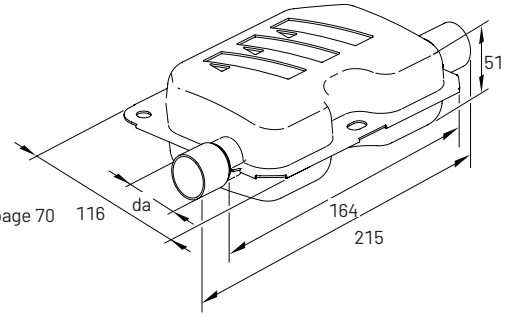

	Airtronic S (2.2 kW)	Airtronic M (4 kW)	Airtronic L (5.5 kW)	Airtronic XL3	Hydronic S3 (5-6 kW)	Hydronic L3 (16-35 kW)	Hydronic M-II (8-12 kW)	Part number
da = 24 mm	■	■	■		■			22.1000.40.2100

■ unrestricted use ~ restricted use

EXHAUST

Exhaust Insulation Sock

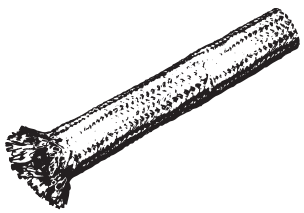

	Airtronic S (2.2 kW)	Airtronic M (4 kW)	Airtronic L (5.5 kW)	Airtronic XL3	Hydronic S3 (5-6 kW)	Hydronic L3 (16-35 kW)	Hydronic M-II (8-12 kW)	Part number
1" for 22 mm-24 mm, ID Exhaust - per mtr	■	■			■			5530001
2" for 24 mm-42 mm, ID Exhaust - per mtr	■	■	■	■	■			5530002
3" for 70 mm, ID Exhaust - per mtr						■		5530003

Exhaust End Cap

a

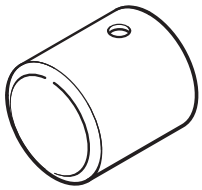

b

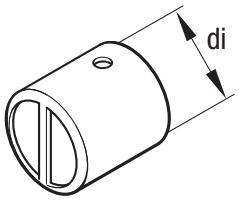

	Airtronic S (2.2 kW)	Airtronic M (4 kW)	Airtronic L (5.5 kW)	Airtronic XL3	Hydronic S3 (5-6 kW)	Hydronic L3 (16-35 kW)	Hydronic M-II (8-12 kW)	Part number
ø 24 mm	■	■	■		■			25.1482.80.0001 a
di = 24 mm	■	■	■		■			20.2900.30.2400a
di = 30 mm							■	25.1785.80.0200 a
di = 42 mm				■				22.1000.40.0200b

Exhaust Clamp for

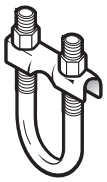

	Airtronic S (2.2 kW)	Airtronic M (4 kW)	Airtronic L (5.5 kW)	Airtronic XL3	Hydronic S3 (5-6 kW)	Hydronic L3 (16-35 kW)	Hydronic M-II (8-12 kW)	Part number
ø 70 mm							■	5530004

Clamp for Exhaust Pipe

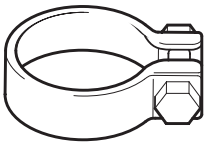

	Airtronic S (2.2 kW)	Airtronic M (4 kW)	Airtronic L (5.5 kW)	Airtronic XL3	Hydronic S3 (5-6 kW)	Hydronic L3 (16-35 kW)	Hydronic M-II (8-12 kW)	Part number
ø 31 mm - ø 34 mm				■				22.1000.51.4500
ø 26 mm	■	■	■		■			152.61.102
Exhaust clamp (ø 26 mm - ø 28 mm)	■	■	■		■			22.1000.50.0500

Clamp for Exhaust Pipe

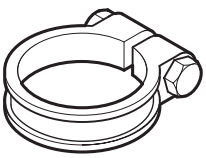

	Airtronic S (2.2 kW)	Airtronic M (4 kW)	Airtronic L (5.5 kW)	Airtronic XL3	Hydronic S3 (5-6 kW)	Hydronic L3 (16-35 kW)	Hydronic M-II (8-12 kW)	Part number
ø 42 mm - ø 45 mm				■				152.09.004

■ unrestricted use ~ restricted use

DUCTING GUIDE

General information:

- Heating-air throughput is at its highest in a heater if the air flow is unimpeded. Heating-air-conducting parts reduce the heating-air throughput.
- In order to give you the opportunity to check that the installation you have planned does not reduce the heating-air throughput to an impermissible level, we have calculated a heater guide number for each heater and a line guide number for the heating-air-conducting parts.
- The total of the line guide numbers of the heating-air-conducting parts connected to the heater must not be greater than the heater guide number, as otherwise the air outlet temperature would be impermissibly high and the overheating sensor would respond.
- If the total of the line guide numbers is greater than the heater guide number, the total can be reduced by selecting a larger diameter for the air ducts.
- With smooth welded pipes, the line guide number is only half of the flexible hose with the same diameter. (i.e. double pipe length).

Rule of thumb:

Double the cross-section or two identical parts installed in parallel = 1/4 of the guide number.

Example:

Hose Ø 60,

Cross-section area A = 19.6 cm^2, guide number 1.0

Hose Ø 75,

Cross-section area A = 44.2 cm^2, guide number 0.25

AIR CONDUCTING PARTS

PLEASE NOTE:
Air ducting is critical to the performance of your heater - for information on how to layout a system and measure restriction values see the ducting rating guide on page 103

1
Protective Grill (Heater)

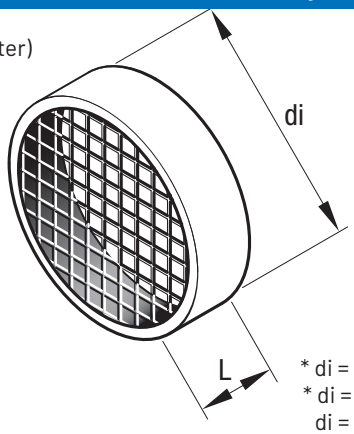

~ = Check connection diameter

	Airtronic S (2.2 kW)	Airtronic M (4 kW)	Airtronic L (5.5 kW)	Airtronic XL3	Hydronic S3 (5-6 kW)	Hydronic L3 (16-35 kW)	Hydronic M-II (8-12 kW)	Part number
* di = 60 mm, L = 20 mm (di=2.4", L= 0.77")	■							25.1688.80.0600
* di = 75 mm, L = 22 mm (di=3", L= 0.87")	■	■						25.1552.05.0100
di = 90 mm, L = 24 mm (di=3.5", L= 0.95")		■	■					25.1729.80.0001
di = 100 mm, L = 22 mm (di=3.9", L= 0.87")				■				25.1226.89.4400

2
Straight Air Outlet Hood

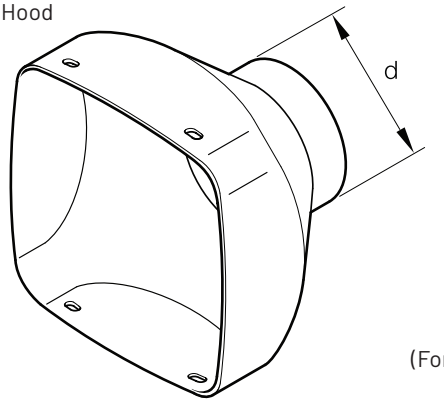

	Airtronic S (2.2 kW)	Airtronic M (4 kW)	Airtronic L (5.5 kW)	Airtronic XL3	Hydronic S3 (5-6 kW)	Hydronic L3 (16-35 kW)	Hydronic M-II (8-12 kW)	Part number
d = 60 mm (2.4")	■							22.1000.01.0016
d = 75 mm (3")	■							22.1000.01.0017
d = 75 mm (3")		■						22.1000.01.0018
d = 90 mm (3.5")		■						22.1000.01.0019
(For Airtronic D5) d = 90 mm (3.5")			■					25.1729.01.0900
d = 90 mm (3.5")			■					22.1000.01.0086
(For D8LC) d = 100 mm (3.9")				■				22.1000.01.0087

3
Ball-shaped scoop

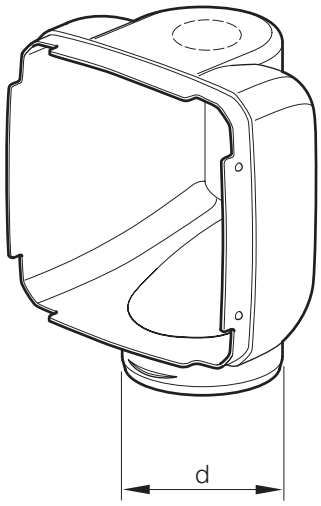

	Airtronic S (2.2 kW)	Airtronic M (4 kW)	Airtronic L (5.5 kW)	Airtronic XL3	Hydronic S3 (5-6 kW)	Hydronic L3 (16-35 kW)	Hydronic M-II (8-12 kW)	Part number
d = 60 mm (2.4") Outlet	■							22.1000.01.0020
d = 75 mm (3") Outlet		■						22.1000.01.0022
d = 90 mm (3.5") Outlet		■						22.1000.01.0023
d = 75 mm (3")	■							22.1000.01.0028

■ unrestricted use ~ restricted use

AIR CONDUCTING PARTS

PLEASE NOTE:
Air ducting is critical to the performance of your heater - for information on how to layout a system and measure restriction values see the ducting rating guide on page 103

		Airtronic S (2.2 kW)	Airtronic M (4 kW)	Airtronic L (5.5 kW)	Airtronic XL3	Hydronic S3 (5-6 kW)	Hydronic L3 (16-35 kW)	Hydronic M-II (8-12 kW)	Part number
4 Ball-shaped scoop for Airtronic D5	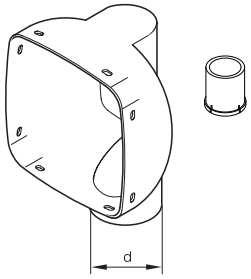								
	d = 90 mm or 3.5"			■					25.1729.89.1000
6 Ball-shaped scoop for Airtronic L3	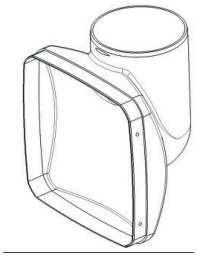								
	d = 90 mm			■					22.1000.01.0088
6.1 Adapter for Items 40, 43 and 44 ~ = Check connection diameter	di = 75 mm, da = 50 mm, L = 50 mm	■	■	~					25 1226 89 00 46
	di = 75 mm, da = 60 mm, L = 45 mm	■	■	~					25 1226 89 00 50
	di = 90 mm, da = 75 mm, L = 45 mm	~	■	■	~				22 1000 01 00 12
	di = 100 mm, da = 50 mm, L = 62 mm		~	~	■				25 1226 89 00 48
	di = 100 mm, da = 60 mm, L = 57 mm		~	~	■				25 1226 89 00 51
	di = 100 mm, da = 75 mm, L = 50 mm	~	~	~	■				25 1226 89 00 47
	di = 100 mm, da = 90 mm, L = 42 mm		~	~	■				25 1226 89 00 49

■ unrestricted use ~ restricted use

AIR CONDUCTING PARTS

PLEASE NOTE:
Air ducting is critical to the performance of your heater - for information on how to layout a system and measure restriction values see the ducting rating guide on page 103

	Airtronic S (2.2 kW)	Airtronic M (4 kW)	Airtronic L (5.5 kW)	Airtronic XL3	Hydronic S3 (5-6 kW)	Hydronic L3 (16-35 kW)	Hydronic M-II (8-12 kW)	Part number
7 Grill (Inlet & Outlet)								
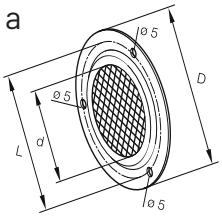 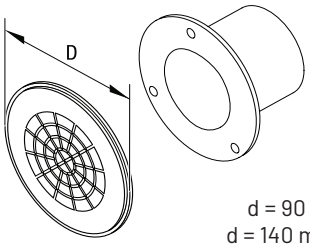								
d = 90 mm or 3.5″	■	■						20.1465.89.0500 a
d = 140 mm or 5.25″		■	■	■				25.1729.89.0005 b
D = 93 mm (3.6″), L = 75 mm (3″) d = 60 mm (2.4″)	■							22.1000.01.0001 b
Nickel Plated Open Screen (d = 140 mm or 5.25″)		■	■	■				25.1226.89.0500 a
8 Ducting Flange (Connecting Socket)								
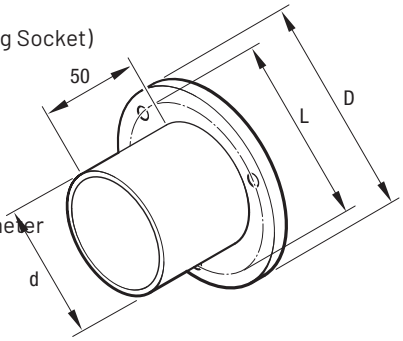								
* D = 93 mm								
~ = Check connection diameter								
for Duct Size 50 mm (2″)	■							20.1575.80.0801
for Duct Size 60 mm (2.4″)	■	~						20.1577.89.0601
for Duct Size 90 mm (3.5″)		■	■	~				20.1297.00.0001
for Duct Size 100 mm (4″)			~	■				25.1226.89.0040
9 Flexible Air Hose (aluminum, paper, plastic)								
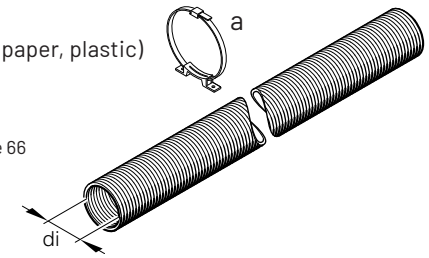								
a For air hose fastening, see page 66								
~ = Check connection diameter								
di = 50mm (2″)	~	~						10.2114.29.0000
di = 60mm (2.4″)	■	~						10.2114.31.0000
di = 75mm (3″)	■	■	~					10.2114.34.0000
di = 90mm (3.5″)		■	■	~				10.2114.37.0000
di = 100mm (4″)		~	~	■				10.2114.38.0000
9.1 Flexible Hose								
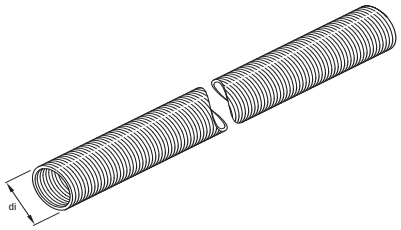								
di = 75 mm (3″)	■	■	~					5550007
di = 100 mm (4″)		~	~	■				5550008
10 Flexible Hose (Plastic hose with metal spiral, suitable for outside installation)								
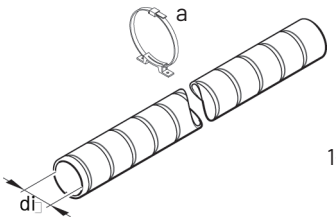								
a For air hose fastening, see page 66								
~ = Check connection diameter								
1-meter pieces	■	~						360.00.165

■ unrestricted use ~ restricted use

AIR CONDUCTING PARTS

PLEASE NOTE:
Air ducting is critical to the performance of your heater - for information on how to layout a system and measure restriction values see the ducting rating guide on page 103

	Airtronic S (2.2 kW)	Airtronic M (4 kW)	Airtronic L (5.5 kW)	Airtronic XL3	Hydronic S3 (5-6 kW)	Hydronic L3 (16-35 kW)	Hydronic M-II (8-12 kW)	Part number
11 90° Bend, Plastic Elbow								
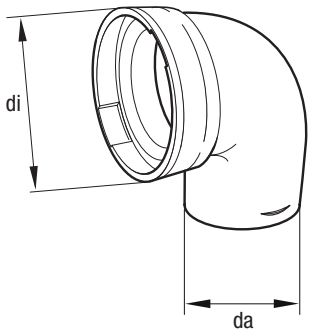								
di = 60 mm (2.4"), da = 60 mm (2.4")	■							25.1688.89.0001
di = 75 mm (3"), da = 75 mm (3")	■	■						25.1482.89.0005
12 Plastic "T" Piece								
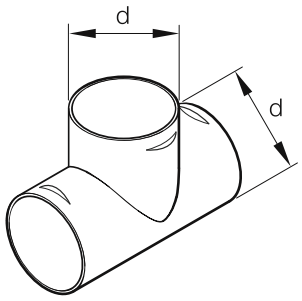								
d = 60 mm (2.4")	■							25.1688.89.0002
d = 75 mm (3")	■	■						22.1000.01.0027
d = 90 mm (3.5")		■						22.1000.01.0026
13 45° Plastic "Y" Connector								
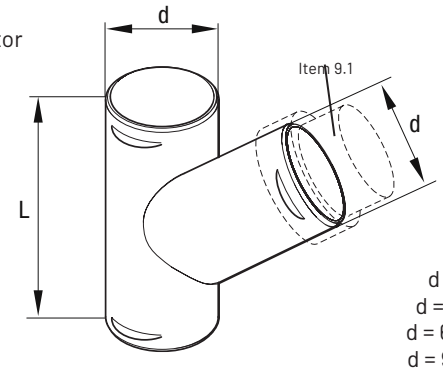								
d = 75 mm (3"), L = 175 mm	■	■	~	~				25.1226.89.0044
d = 100 mm (4"), L = 230 mm		~	~	■				25.1226.89.0045
d = 60 mm (2.4"), L = 145 mm	■							25.1774.89.0005
d = 90 mm (3.5"), L = 180 mm	~	■	~	~				22.1000.01.0021
13.1 Plastic Reducer for "Y" or Ducting Union								
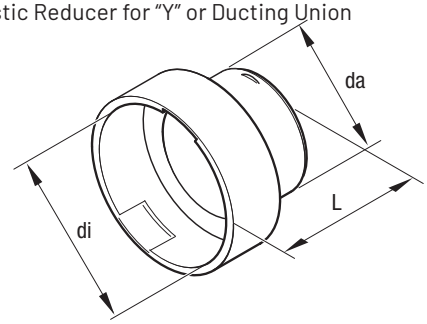								
di = 90 mm (3.5"), da = 75 mm (3"), L = 45 mm	~	■	■	~				22.1000.01.0012
di = 75 mm (3"), da = 50 mm (2"), L = 50 mm	■	■	~					25.1226.89.0046
di = 100 mm (4"), da = 75 mm (3"), L = 50 mm	~	~	~	■				25.1226.89.0047
di = 100 mm (4"), da = 50 mm (2"), L = 62 mm		~	~	■				25.1226.89.0048
di = 75 mm (3"), da = 60 mm (2.4"), L = 45 mm	■	■	~					25.1226.89.0050

■ unrestricted use ~ restricted use

AIR CONDUCTING PARTS

PLEASE NOTE:
Air ducting is critical to the performance of your heater - for information on how to layout a system and measure restriction values see the ducting rating guide on page 103

	Airtronic S (2.2 kW)	Airtronic M (4 kW)	Airtronic L (5.5 kW)	Airtronic XL3	Hydronic S3 (5-6 kW)	Hydronic L3 (16-35 kW)	Hydronic M-II (8-12 kW)	Part number
13.2 Symmetrical "Y" Piece								
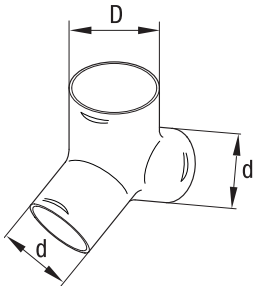								
Plastic, D = 60 mm, d =50 mm	■							25.1688.89.0003
Plastic, D = 75 mm, d =60 mm	■	■						22.1000.01.0082
Plastic, D = 90 mm, d =60 mm	■	■	~					22.1000.01.0083
Plastic, D = 90 mm, d =75 mm		■						22.1000.01.0084
14 Butterfly Valve with regulating flap a Adapter see item 13.1								
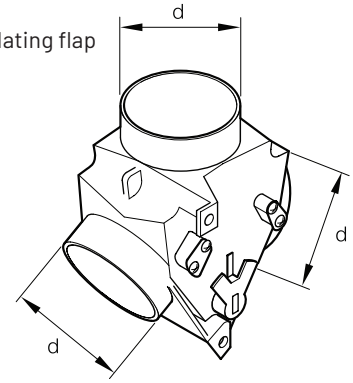								
								
d = 60 mm	■							330.00.174
d = 90 mm	~	■	■					330.00.175
14.1 Operating Cable for item 14 2 m long								
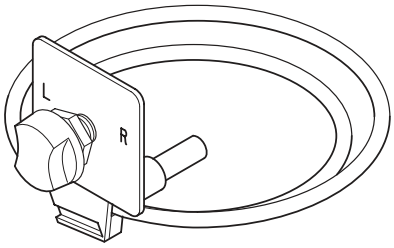								
Requires air regulating valve	■	■	■					22.1000.01.0300
15 Outlet Grill with Connecting Piece (Rotatable)								
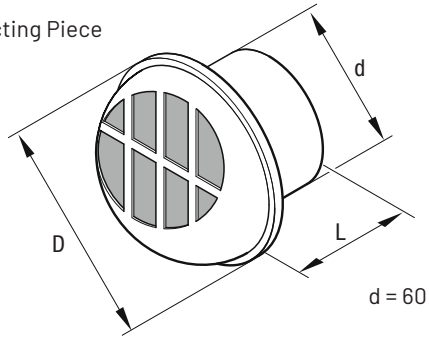								
d = 60 mm, D = 97 mm, L = 50 mm	■	~						20.2800.50.0200

■ unrestricted use ~ restricted use

AIR CONDUCTING PARTS

PLEASE NOTE:
Air ducting is critical to the performance of your heater - for information on how to layout a system and measure restriction values see the ducting rating guide on page 103

16
Ducting Flange (Plastic connecting piece)

For vents, Items: 16.2, 17, 18, 18.1, 19

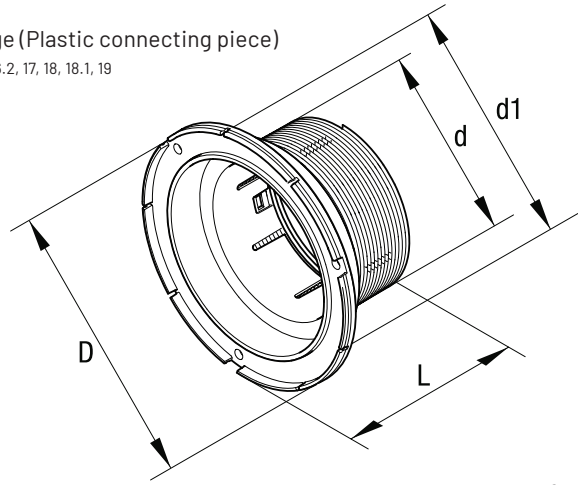

d1 = core drill bit diameter

~ = Check connection diameter

	Airtronic S (2.2 kW)	Airtronic M (4 kW)	Airtronic L (5.5 kW)	Airtronic XL3	Hydronic S3 (5-6 kW)	Hydronic L3 (16-35 kW)	Hydronic M-II (8-12 kW)	Part number
d = 50 mm, d1 = 67 mm, D = 89 mm, L = 39 mm, black	■							22.1000.01.0034
d = 60 mm, d1 = 67 mm, D = 89 mm, L = 40 mm, black	■	■						22.1000.01.0035
d = 75 mm, d1 = 92 mm, D = 115 mm, L = 42 mm, black	■	■	■	~				22.1000.01.0036
d = 90 mm, d1 = 92 mm, D = 115 mm, L = 40 mm, black		■	■	■				22.1000.01.0037

16.1
Air Control Element

(2 position)

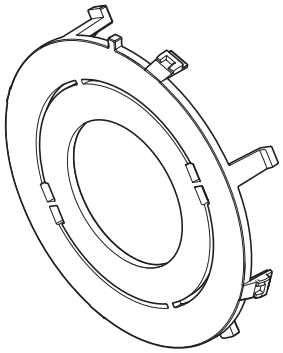

~ = Check connection diameter
** for fitting, item 16, order no. 22.1000.01.0036 - Plastic
*** for fitting, item 16, order no. 22.1000.01.0037 - Plastic

	Airtronic S (2.2 kW)	Airtronic M (4 kW)	Airtronic L (5.5 kW)	Airtronic XL3	Hydronic S3 (5-6 kW)	Hydronic L3 (16-35 kW)	Hydronic M-II (8-12 kW)	Part number
** ø 75 mm	■	■	■					22.1000.01.0080
*** ø 90 mm		■	■	~				22.1000.01.0081

16.2
Upright vent, 30°

(Rotable)

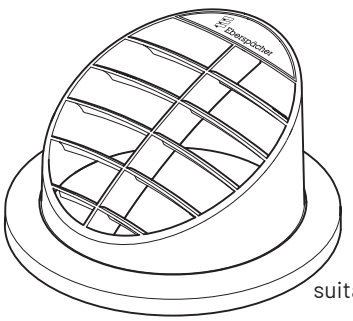

	Airtronic S (2.2 kW)	Airtronic M (4 kW)	Airtronic L (5.5 kW)	Airtronic XL3	Hydronic S3 (5-6 kW)	Hydronic L3 (16-35 kW)	Hydronic M-II (8-12 kW)	Part number
suitable for ø 50 / 60 mm fitting, black	■	~						22.1000.01.0056

■ unrestricted use ~ restricted use

AIR CONDUCTING PARTS

PLEASE NOTE:
Air ducting is critical to the performance of your heater - for information on how to layout a system and measure restriction values see the ducting rating guide on page 103

	Airtronic S (2.2 kW)	Airtronic M (4 kW)	Airtronic L (5.5 kW)	Airtronic XL3	Hydronic S3 (5-6 kW)	Hydronic L3 (16-35 kW)	Hydronic M-II (8-12 kW)	Part number
17 **90° Upright Vent** (Rotatable) 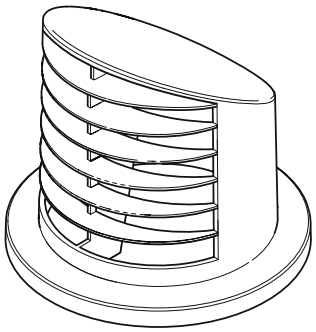								
Suitable for ø 50/60 mm fitting, black	■	~						22.1000.01.0064
Suitable for ø 75/90 mm fitting, black	■	■	~					22.1000.01.0068
18 **30° Outlet Screen (Flat)** Rotatable, see Item 16 for fitting 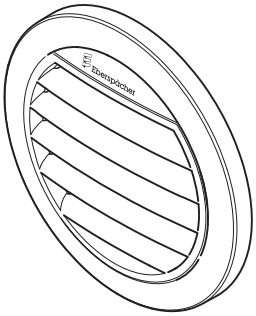								
Suitable for ø 50/60 mm fitting, black)	■							22.1000.01.0044
Suitable for ø 75/90 mm fitting, black)	■	■	~					22.1000.01.0052
18.1 **0° Outlet Screen (Flat)** (For 75/90mm flange) 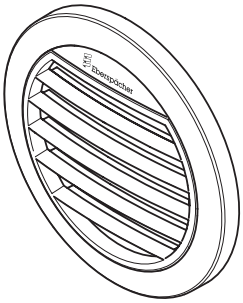								
Suitable for 75/90 mm fitting, black)	■	■	■					22.1000.01.0048

■ unrestricted use ~ restricted use

AIR CONDUCTING PARTS

PLEASE NOTE:
Air ducting is critical to the performance of your heater - for information on how to layout a system and measure restriction values see the ducting rating guide on page 103

	Airtronic S (2.2 kW)	Airtronic M (4 kW)	Airtronic L (5.5 kW)	Airtronic XL3	Hydronic S3 (5-6 kW)	Hydronic L3 (16-35 kW)	Hydronic M-II (8-12 kW)	Part number
19 Outlet Screen Closable Rotatable, see Ducting Flange (Plastic) for fitting								
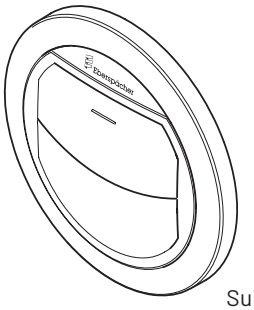								
Suitable for ø 50/60 mm fitting, black	■	■						22.1000.01.0072
Suitable for ø 75/90 mm fitting, black	■	■	■	~				22.1000.01.0076
20 Outlet Vent with Flange (Rotatable)								
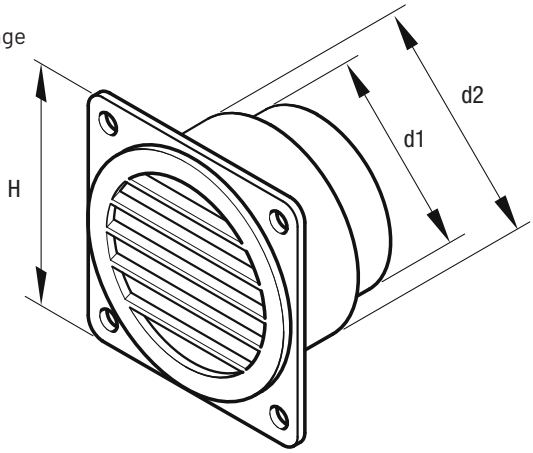								
d1 = 90 mm (3.5"), d2 = 100 mm (4"), H = 110 mm		■	■	~				20.1609.80.0900
d1 = 75 mm (3"), d2 = 100 mm (4"), H = 110 mm	■	■						22.1050.89.2100
# 21 Adapter Ring Protective grille (Item 25), di = 90 mm. Can be used as an adapter – remove grille.								
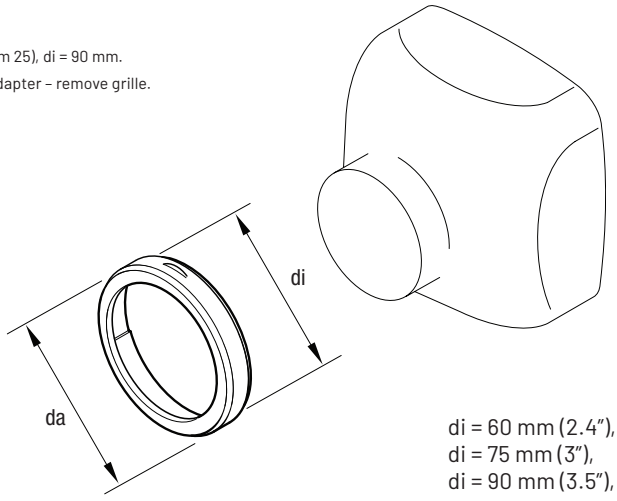								
di = 60 mm (2.4"), da = 75 mm (3")	■							22.1000.01.0008
di = 75 mm (3"), da = 90 mm (3.5")	■	■						25.1822.89.0001
di = 90 mm (3.5"), da = 100 mm (4")		■	■					20.1607.80.0001

■ unrestricted use ~ restricted use

AIR CONDUCTING PARTS

PLEASE NOTE:
Air ducting is critical to the performance of your heater - for information on how to layout a system and measure restriction values see the ducting rating guide on page 103

		Airtronic S (2.2 kW)	Airtronic M (4 kW)	Airtronic L (5.5 kW)	Airtronic XL3	Hydronic S3 (5-6 kW)	Hydronic L3 (16-35 kW)	Hydronic M-II (8-12 kW)	Part number
22 Plastic Reducer	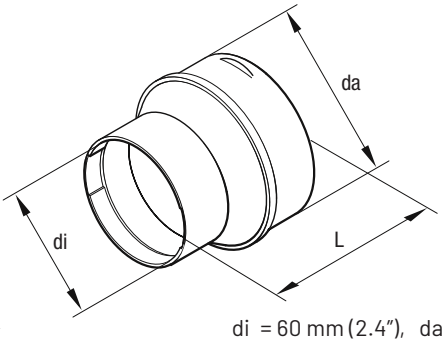								
~ = Check connection diameter	di = 60 mm (2.4"), da = 75 mm (3"), L = 40.5 mm	■	~						25.1688.89.0010
23 Ducting Union, straight	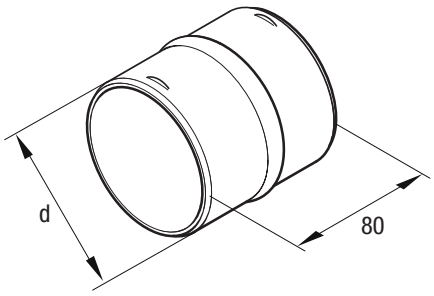								
	d = 60 mm (2.4")	■							22.1000.01.0005
	d = 75 mm (3")	■	~	~	~				22.1000.01.0006
	d = 90 mm (3.5")	~	■	■	~				22.1000.01.0024
	d = 100 mm (4")		~	~	■				22.1000.01.0007
24 Air Silencer (Inlet & Outlet Duct) Hot air, aluminum	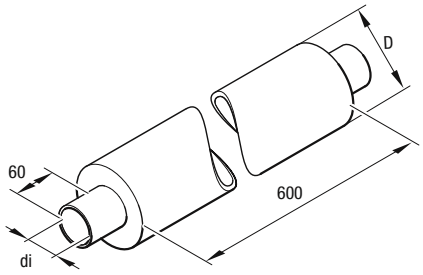								
~ = Check connection diameter	di = 75 mm, D = 120 mm	■	■						25.1226.89.1500
	di = 100 mm, D = 150 mm		~	~	■				25.1226.89.5600
25 Holder Connection Piece 60 HL	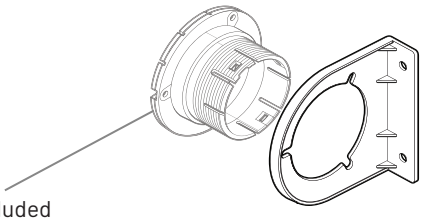								
not included	Suitable for ø 50/60 mm fitting, black)	■							22.1000.01.1400

■ unrestricted use ~ restricted use

INTAKE (COMBUSTION AIR)

	Airtronic S (2.2 kW)	Airtronic M (4 kW)	Airtronic L (5.5 kW)	Airtronic XL3	Hydronic S3 (5-6 kW)	Hydronic L3 (16-35 kW)	Hydronic M-II (8-12 kW)	Part number
Air Intake Hood								
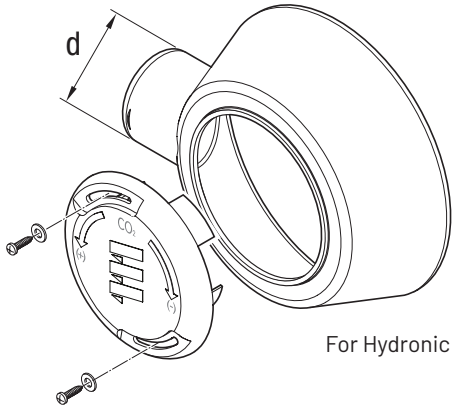 For Hydronic L and L II heaters only								
d = 60, mm (2.4")								22.1000.40.0600
Combustion Air Intake Flex Hose								
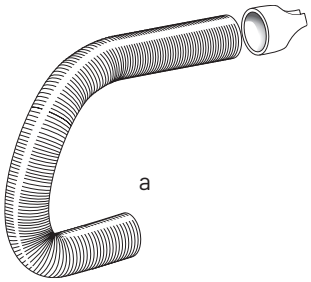 b								
per mtr, ID = 25 mm	■	■	■	■			■	10.2114.21.0000 a
per mtr, ID = 30 mm								10.2114.25.0000
End Cap				■				25.1480.89.0400 b
Hose Comb. Air - 25mm (1m)	■	■	■	■				360.00.006
Hose - 20mm APK Comb Air (1m)					■			360.00.099
Plastic Air Intake End Cap with Crossbar								
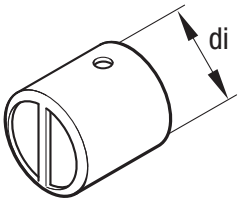								
di = 20 mm					■			25.1688.80.1201
di = 25 mm	■	■	■	■				25.1729.89.0002
Silencer for combustion air Flexible								
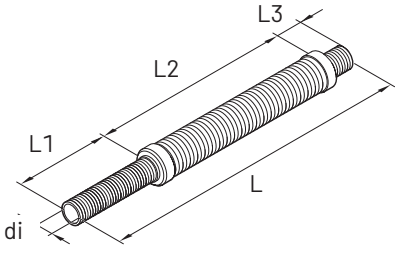								
di = 25 mm, L1 = 135 mm, L2 = 405 mm, L3 = 25 mm, L = 565 mm	■	■	■	■				20.1689.80.0500

■ unrestricted use ~ restricted use

INTAKE (COMBUSTION AIR)

	Airtronic S (2.2 kW)	Airtronic M (4 kW)	Airtronic L (5.5 kW)	Airtronic XL3	Hydronic S (5-6 kW)	Hydronic L3 (16-35 kW)	Hydronic M-II (8-12 kW)	Part number
Intake Silencer 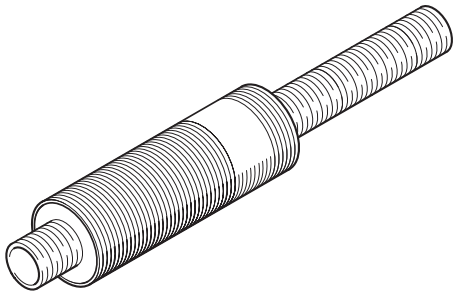			■	■				20.1609.80.0400
Air Int Muffler w/End Cap 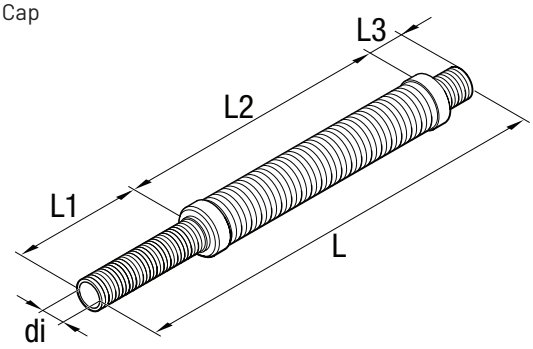 di = 25 mm, L1 = 90 mm, L2 = 300 mm, L3 = 40 mm, L = 430 mm							■	25.1786.80.0200
Combustion Airt Intake 410mm 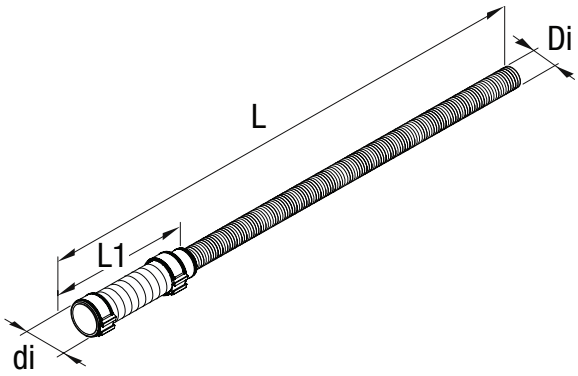 Di = 20 mm, di = 38 mm, L1 = 160 mm, L = 760 mm					■			22.1000.40.0010

■ unrestricted use ~ restricted use

COOLANT SYSTEM

General information:

- Install coolant pump no higher than the heater and preferably lower.
- All parts of the heater coolant system must always be below the engine's coolant level.
- When installing a coolant heater, always use hoses approved for use with vehicles, otherwise there is a danger of the hose bursting or layers of the hose separating, clogging the coolant circuit.
- Always secure coolant hoses with hose clips at connections.
- Always route coolant hoses so that they are not affected by moving parts and cannot be chafed. Pay particular attention to the heavy vibration caused by switching the engine on and off.
- Always use a large radius when routing coolant hoses to prevent kinking, and do not leave hoses hanging loose.
- Protect coolant hoses from intense heat or even contact with hot engine parts, e.g. the exhaust pipe.
- Always air-bleed the entire coolant circuit of a vehicle after any assembly operation.
- Please also refer to the safety information on this section in the heater documentation.

COOLANT PUMPS

	Airtronic S (2.2 kW)	Airtronic M (4 kW)	Airtronic L (5.5 kW)	Airtronic XL3	Hydronic S3 (5-6 kW)	Hydronic L3 (16-35 kW)	Hydronic M-II (8-12 kW)	Part number
Coolant pump 12V for Hydronic S3 Economy								
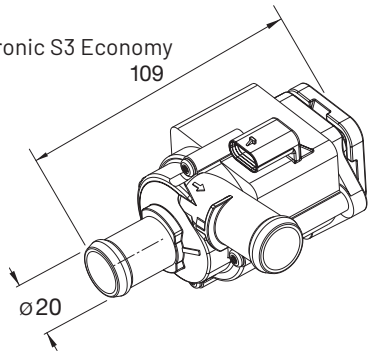								
Mounting bracket for coolant pump 12 V					~			25.2652.25.0000
~ = Compatible only with Hydronic S3 Economy								
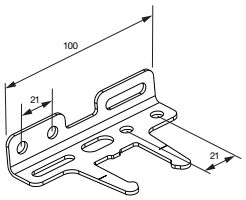 Mounting bracket for coolant pump					~			22.1000.51.3900
Coolant pump								
with mounting bracket installed, adapter cable, M6x12 hexagon screws								
Coolant flow rate 850 l / h at 0.1 ba								
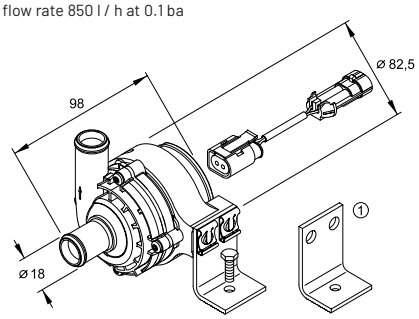 Coolant pump pre-assembled W 24V								25.2750.25.0000
12 V					■			25.2217.27.0000
Holder for coolant pump					~			25.2217.27.0100
Flowtronic 800 S coolant pump								
Coolant flow rate 820 l / h at 0.1 bar								
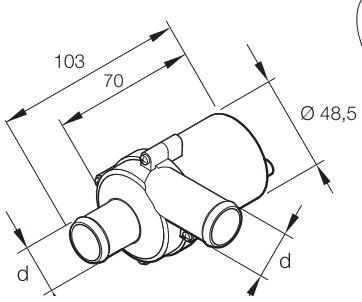 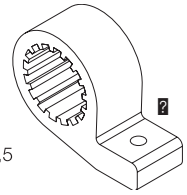								
~ = excluding Hydronic S3 Economy								
12 V, d = 20 mm					~			25.2275.25.0000
24 V, d = 18 mm					~			25.2218.25.0000
Holder for coolant pump					~			22.1000.50.0700
Flowtronic 1400 coolant pump								
* With Hydronic S3 Economy(12V): EasyScan programming required (specification as an uncontrolled pump)								
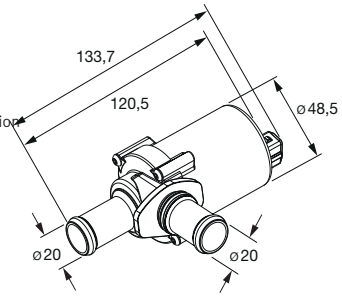								
12 v without holder					~		~	25.2434.99.2501*
24 v without holder					~		~	25.2435.99.2501
Holder for coolant pump					~		~	22.1000.50.0700

* Is included in the scope of supply with New HS3 CS 12 heater with p/n 25.3123.05.0000

■ unrestricted use ~ restricted use

COOLANT PUMPS

		Airtronic S (2.2 kW)	Airtronic M (4 kW)	Airtronic L (5.5 kW)	Airtronic XL3	Hydronic S3 (5-6 kW)	Hydronic L3 (16-35 kW)	Hydronic M-II (8-12 kW)	Part number
Flowtronic 6000 SC coolant pump With magnetic coupling and mounting bracket Coolant flow rate 6,000 l / h at 0.4 bar	24 V						■		25.2488.25.0000
Flowtronic 6000 SC spares kit							■		25.2488.99.2510
Flowtronic 5000 coolant pump With mounting bracket, water flow rate 5,200 l / h at 0.2 bar	24 V						■		25 2488 26 00 00
Flowtronic 5000 spares kit For coolant pump 25.2488.26.0000							■		25.2488.99.2610
Flowtronic 1200 S coolant pump With magnetic coupling, 200 mm long cable harness 12 V without mounting bracket, 24 V with mounting bracket Coolant flow rate 700 l / h at 0.3 bar	12 V without mounting bracket, cable harness without connector housing							~	25.1815.25.0100
	12 V E-Guardian Coolant Pump							■	25.2596.25.0100
	24 V with mounting bracket installed, cable harness with flat connector housing							~	25 1928 80 02 00

■ unrestricted use ~ restricted use

PLUMBING

		Airtronic S (2.2 kW)	Airtronic M (4 kW)	Airtronic L (5.5 kW)	Airtronic XL3	Hydronic S3 (5-6 kW)	Hydronic L3 (16-35 kW)	Hydronic M-II (8-12 kW)	Part number
Coolant hose wall thickness 4.5 mm For spacer ring, see page 121 ~= check connection diameter	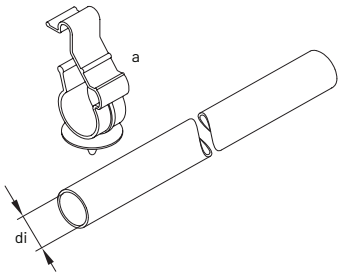	di = 18 mm, L = 2 m				■	~		360.75.407
Coolant hose wall thickness 4.5 mm ~= check connection diameter	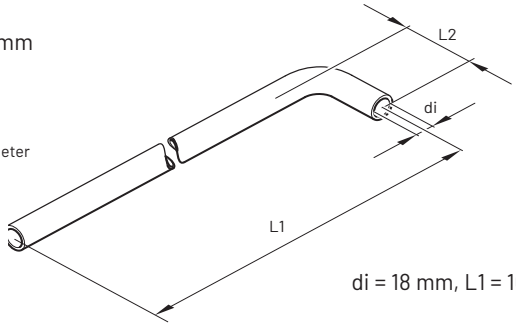	di = 18 mm, L1 = 1000 mm, L2 = 50 mm				■	~		20.1645.80.0001
Coolant pumps									
		HELLA- Coolant Pump Hydronic M II 24V						■	25.2499.25.0100
		Coolant Pump HYDRONIC II - 12V							25.2526.25.0000

■ unrestricted use ~ restricted use

PLUMBING

		Airtronic S (2.2 kW)	Airtronic M (4 kW)	Airtronic L (5.5 kW)	Airtronic XL3	Hydronic S3 (5-6 kW)	Hydronic L3 (16-35 kW)	Hydronic M-II (8-12 kW)	Part number
Connection Pipe	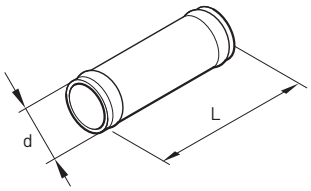								
	Plastic, d = 18 mm, L = 60 mm					~	■		22.1000.10.2500
	Brass, d = 18 mm, L = 55 mm					■	~		20.1528.88.0003
	Plastic, d = 20 mm, L = 60 mm					~	■		22.1000.10.0103
	Brass, d = 22 mm, L = 55 mm					~	~		20.1645.89.0007
Brass Reducer	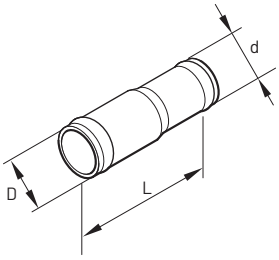								
	D = 20 mm, d = 18 mm L = 60 mm					■	■		20.1645.89.0006
Plastic Reducer	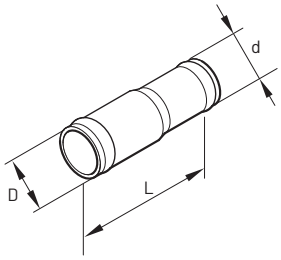								
	D = 20 mm, d = 18 mm, L = 60 mm					■		■	22.1000.10.0104
T-piece Brass	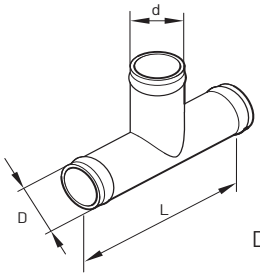								
~ = Check connection diameter	D = 18 mm, d= 15 mm, L = 65 mm					■	~		25.1214.89.1600
	D = 20 mm, d= 20 mm, L = 75 mm					■	~		20.1673.80.1100
T-piece Plastic	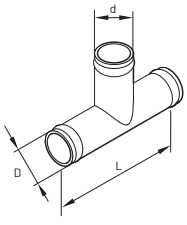								
~ = Check connection diameter	D = 18 mm, d= 15 mm, L = 65 mm					~	~		22.1000.10.2100
	D = 20 mm, d= 20 mm, L = 75 mm					~	~		22.1000.10.2300
	D = 20 mm, d= 20 mm, L = 75 mm						■		22.1000.10.2200

■ unrestricted use ~ Restricted use

PLUMBING

		Airtronic S (2.2 kW)	Airtronic M (4 kW)	Airtronic L (5.5 kW)	Airtronic XL3	Hydronic S3 (5-6 kW)	Hydronic L3 (16-35 kW)	Hydronic M-II (8-12 kW)	Part number
One Way Check Valve	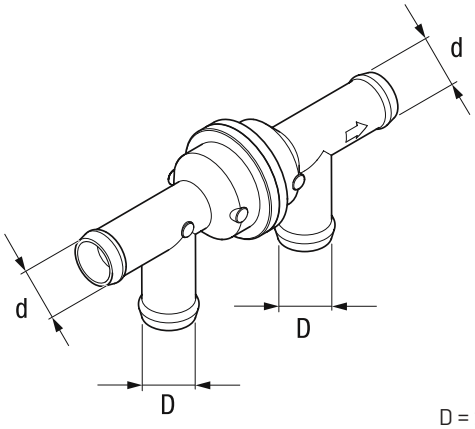								
	D = 20 mm, d = 20 mm					~			22.1000.10.1000
	Non-Return Valve, D = 20 mm, d = 18 mm							~	22.1000.10.1100
One Way Check Valve	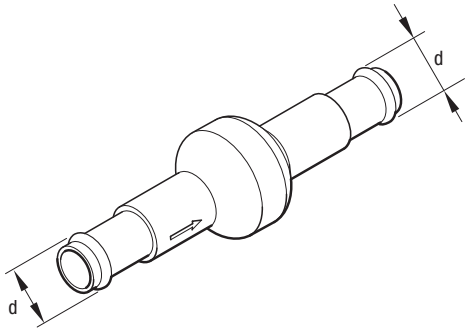								
	d = 20 mm					~			22.1000.10.0800
Combi valve with thermostat function with five connections	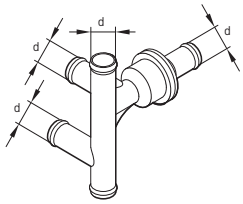 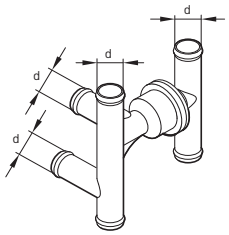								
	d = 20 mm ~ = Check connection diameter								
	6-way valve with thermostat								25.2014.80.6200
	5-way valve with thermostat								25.2014.80.7200
Water Check Valve	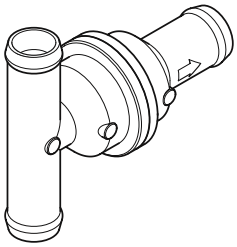								
	D = 20 mm, d = 20 mm					~			22.1000.10.0700

unrestricted use ~ restricted use

PLUMBING

		Airtronic S (2.2 kW)	Airtronic M (4 kW)	Airtronic L (5.5 kW)	Airtronic XL3	Hydronic S3 (5-6 kW)	Hydronic L3 (16-35 kW)	Hydronic M-II (8-12 kW)	Part number
Clamp	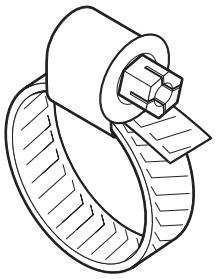								
	ID = 16-25 mm					■			10.2067.01.6025
	ID = 20-32 mm	■	■	■		■	■	■	10.2066.02.0032
Pump Clamp and Rubber Ring	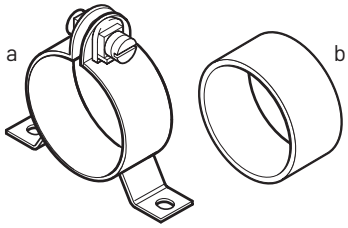								
	Pump Clamp 48 mm 22				■	■			22.1000.50.1000 a
	Rubber Ring for Large FMP				■				20.1449.00.1001 b
Bulk Head Fitting	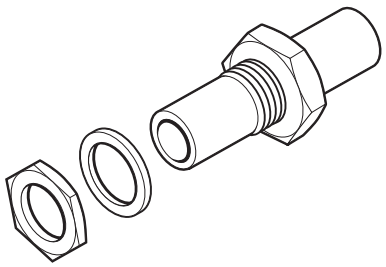								
	3/4" - 2 pieces required					■		■	20.2900.60.1010
	1/2 - 3/4 Straight Barb Connection								5520068
Brass Water Thermostat	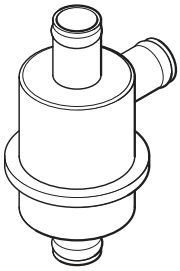								
	D = 18mm, d = 18mm (70°C-75°C) 158°F-167°F					■		■	330.00.123

■ unrestricted use ~ Restricted use

PLUMBING

	Airtronic S (2.2 kW)	Airtronic M (4 kW)	Airtronic L (5.5 kW)	Airtronic XL3	Hydronic S3 (5-6 kW)	Hydronic L3 (16-35 kW)	Hydronic M-II (8-12 kW)	Part number	
Conversion Kit for Water Pump 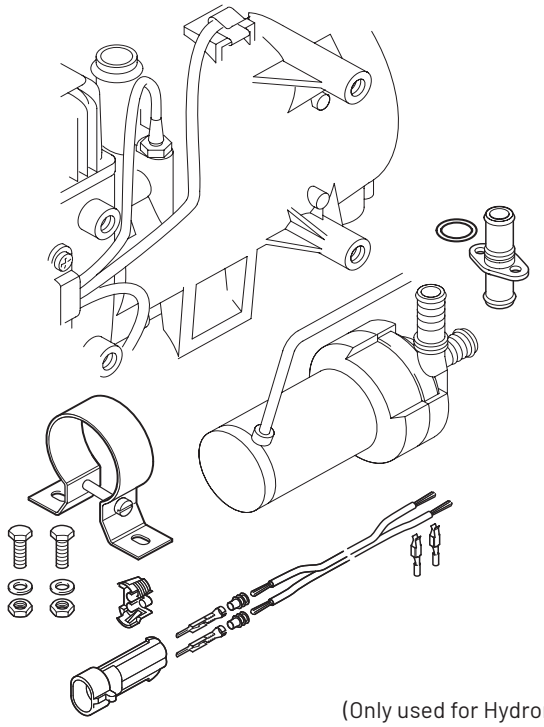 (Only used for Hydronic 10/M)								22.1000.10.0100	
180° Coolant Hose 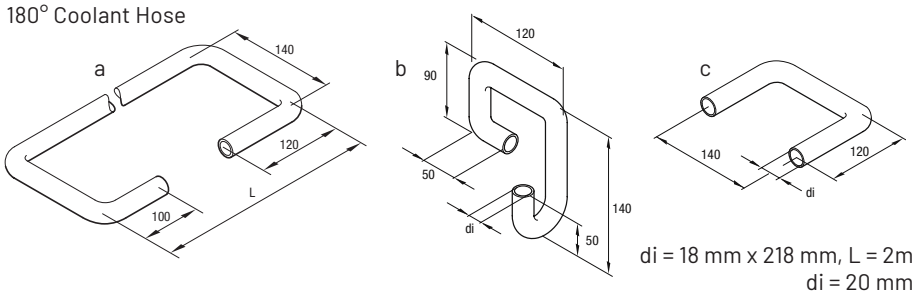 ~ = preferably for connecting Hydronic 2 / Hydronic 2 C with the water pump									
di = 18 mm x 218 mm, L = 2m							~	20.1690.81.0001	a
di = 20 mm								25.1917.80.0001	a
di = 20 mm					~			25.2526.80.0102	b
di = 20 mm					~			24.0117.80.0001	c
90º Hose Bend 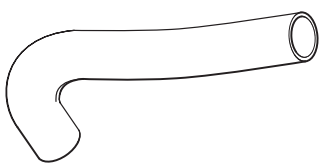 20 mm x 0.29 m								20.2900.60.1023	

unrestricted use ~ restricted use

COOLANT CIRCUITS ON A HYDRONIC S3 ECONOMY

"Inline integration" of cooling circuit:

Cut through the coolant feed hose from the vehicle engine to the vehicle convector. Connect the heater and coolant pump to the coolant feed hose using connection fittings and coolant hoses. Run and connect a coolant hose from the coolant pump pressure fitting to the heater coolant inlet fitting.

Heating characteristic

When the heater is switched on, heat is initially conveyed only to the vehicle's engine via the vehicle convector. Once the coolant temperature reaches approx. 30 °C, the vehicle fan starts up and heat is supplied to the passenger compartment as well.

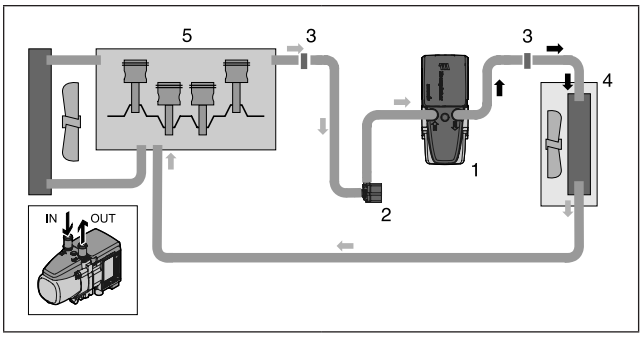

1 Heater
2 Coolant pump
3 Connecting piece
4 Convector
5 Vehicle engine

Cooling circuit with check valve:

Cut through the coolant feed hose from vehicle engine to the vehicle convector, and insert the check valve. Connect the heater and the coolant pump to the check valve using coolant hoses. Run and connect a coolant hose from the coolant pump pressure fitting to the heater water inlet fitting.

Heating characteristic

When the heater is switched on, heat is initially conveyed only to the vehicle's engine via the vehicle convector. Once the coolant temperature reaches approx. 30 °C, the vehicle fan starts up and heat is supplied to the passenger compartment as well.

Advantage compared to in-line integration in the water circuit

No loss of performance on the vehicle heater when the heater is switched off.

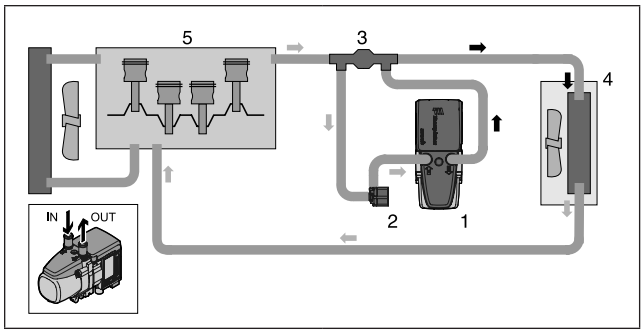

1 Heater
2 Coolant pump
3 Check valve
4 Convector
5 Vehicle engine

Note:

- The check valve must be ordered separately.

COOLANT CIRCUITS ON A HYDRONIC S3 ECONOMY

Cooling circuit with combi valve:

Using the combi valve with five connections

If the water feed and return lines between the vehicle's engine and convector are installed separately in the engine compartment, the combi valve with five connections must be used along with a T-piece.

Using the combi valve with six connections

If the water feed and return lines between the vehicle's engine and convector are installed in parallel in the engine compartment, the combi valve with six connections can be used (without a T-piece).

Heating characteristic in pre-heating mode – small cooling circuit:

Initially the heat from the heater, at a coolant temperature of approximately 67 °C, is conveyed only to the vehicle convector, rapidly heating the vehicle interior.

Once the coolant temperature reaches around 67 °C, some of the heat from the heater is also conveyed to the engine. This allows the engine to be pre-heated while preventing the "small cooling circuit" for interior heating from cooling too fast.

Heating characteristic in additional heating mode – large cooling circuit

When the vehicle's engine is operating, heat is distributed evenly between the convector and engine, making the warm-up phase even shorter and heating the vehicle interior.

Installing a combi valve with five connections:

Cut through the water feed hose from the vehicle engine to the vehicle convector, and install the combi valve. Cut through the water return hose from the vehicle convector to the vehicle engine, and insert the T-piece. Connect the heater and water pump to the combi valve and T-piece using water hoses as shown in the drawing.

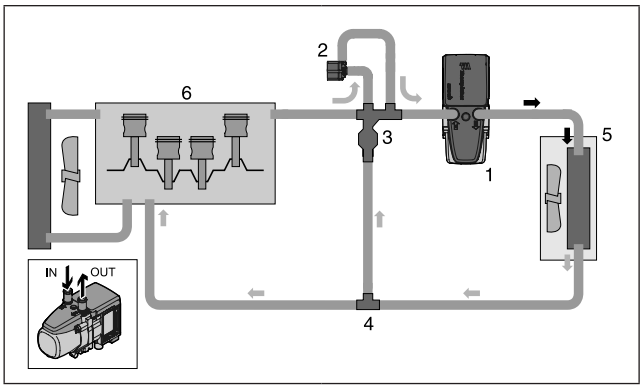

1 Heater
2 Water pump
3 Combi valve (five connections)
4 T-piece
5 Vehicle convector
6 Vehicle engine

COOLANT CIRCUITS ON A HYDRONIC S3 ECONOMY

Installing a combi valve with six connections:

Cut through the water feed and return hoses between the vehicle engine and vehicle convector, and install the combi valve. Connect the heater and water pump to the combi valve using water hoses as shown in the drawing.

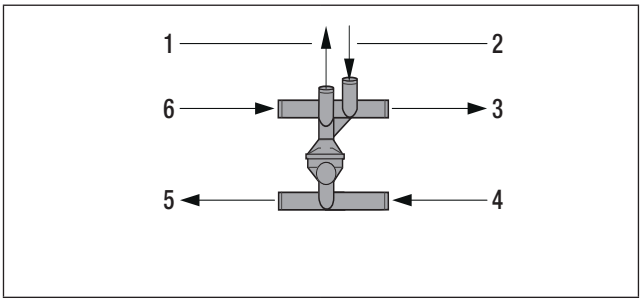

1 To water pump
2 From water pump
3 To heater
4 From vehicle convector
5 To vehicle engine
6 From vehicle engine

Cooling circuit with two check valves:

To pre-heat the vehicle interior only (vehicle engine disengaged)

Cut through the water feed and return hoses between the vehicle engine and vehicle convector and insert one check valve in each hose. It is essential to observe the flow direction of the check valves.

Install the heater in the water feed hose between the check valve and the vehicle convector.

Connect the water pump to the check valve using water hoses.

Heating characteristic

When the heater is switched on, the heat is conveyed only to the vehicle's convector. Once the coolant temperature reaches approx. 30 °C, the vehicle fan starts up and the heat is supplied exclusively to the passenger compartment.

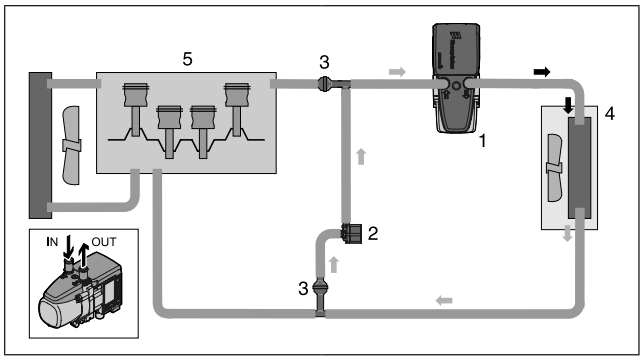

1 Heater
2 Water pump
3 T-piece with check valve
4 Vehicle convector
5 Vehicle engine

HYDRONIC S3 - OPTIONAL ADD-ON FUEL SUPPLY

Diesel:

- Hydronic S3 Economy with admission-pressure-resistant metering pump
- Advantage: easy to connect to the vehicle's fuel system, speeding up installation
- Prerequisite: fuel pressure < 2 bar with diesel, no check valve on the tank connection, return line ends just above the tank floor

Please note!

The following version of the Hydronic S3 Economy includes the admission-pressure-resistant metering pump:

D5E 12 V: 25.2994.05.0000

Gasoline:

- Gasoline applications with an admission pressure of > 0.2 bar still require the pressure reducer

Please note!

For fuel lines pressurized at 2.0 bar to max. 4.0 bar, use the pressure reducer (order no. 22.1000.20.0800) or a separate tank connection.

Fuel is extracted via a T-piece in the fuel return line from the vehicle engine to the tank fitting

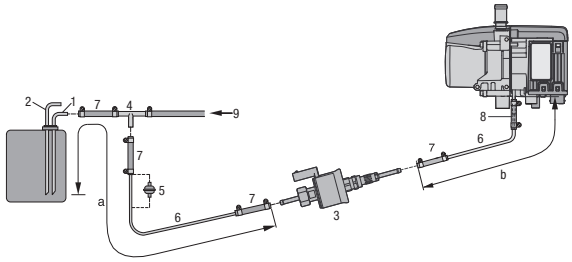

1. Fuel return line from the vehicle's tank fitting
2. Fuel supply line from vehicle's tank fitting
3. Metering pump (admission pressure resistant up to 2.0 bar) identified with a green label
4. T-piece
5. Fuel filter – required only for contaminated fuel
6. Fuel pipe, 4 x 1 (di = Ø 2 mm, blue)
7. Fuel hose 3.5 x 3 (di Ø 3.5 mm), approx. 50 mm long
8. Adapter (Ø 4.5 / 3.5 mm)
9. From vehicle engine to tank fitting

Permissible line lengths on suction side: a = max. 2 m
Pressure side: b = max. 6 m

FUEL SYSTEM GUIDE

This guide is to help in selecting which size fuel line, rubber hose and clamps are required for a specific heating system.
Refer to the Fuel System section of this manual for specific part numbers.
Cross-reference this information with the corresponding heater manual for maximum height and length specifications.

AIRTRONIC S3/M3/L3/XL3

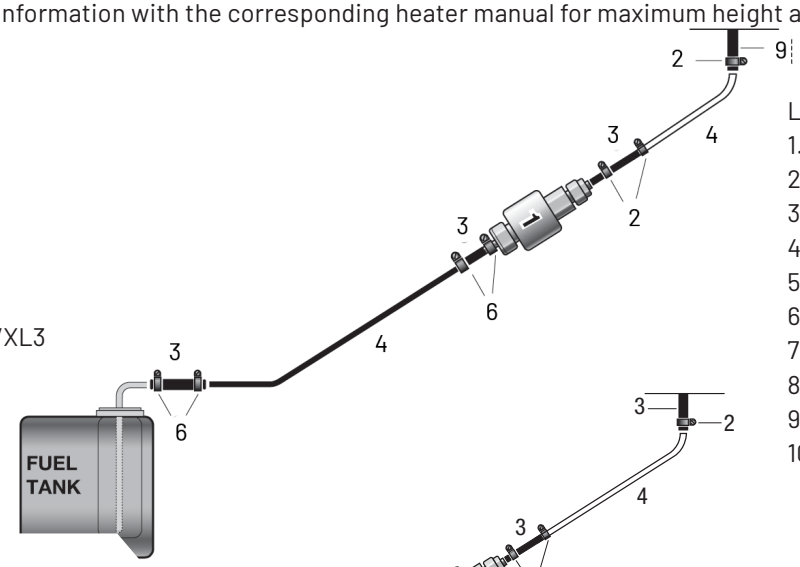

LEGEND
1. Fuel Metering Pump
2. Clamp 9mm
3. Rubber Connector 3.5mm
4. White Plastic Fuel Line 2.0mm
5. Rubber Connector / Fuel Line 5.0mm
6. Clamp 11mm
7. Black Plastic Fuel Line 2.0mm
8. White Plastic Fuel Line 1.5mm
9. Adapter: d=4.5 / 3.5mm
10. Clamp 10mm

XL3
HYDRONIC 10

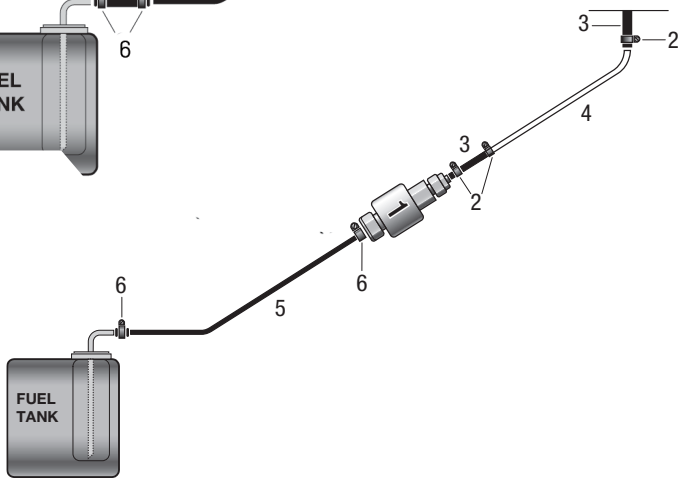

HYDRONIC 5
HS3 CS

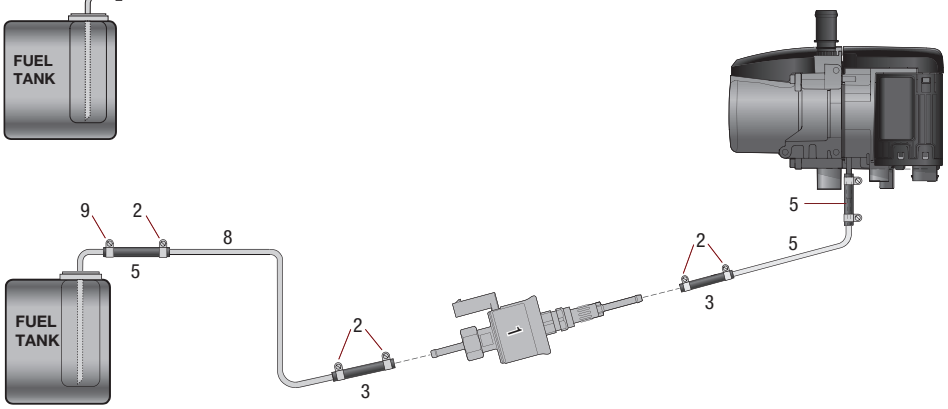

HYDRONIC 16
HYDRONIC 24
HYDRONIC 30
HYDRONIC 35

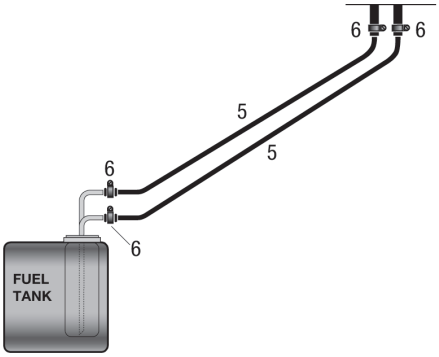

SELECTING THE AIR HEATER

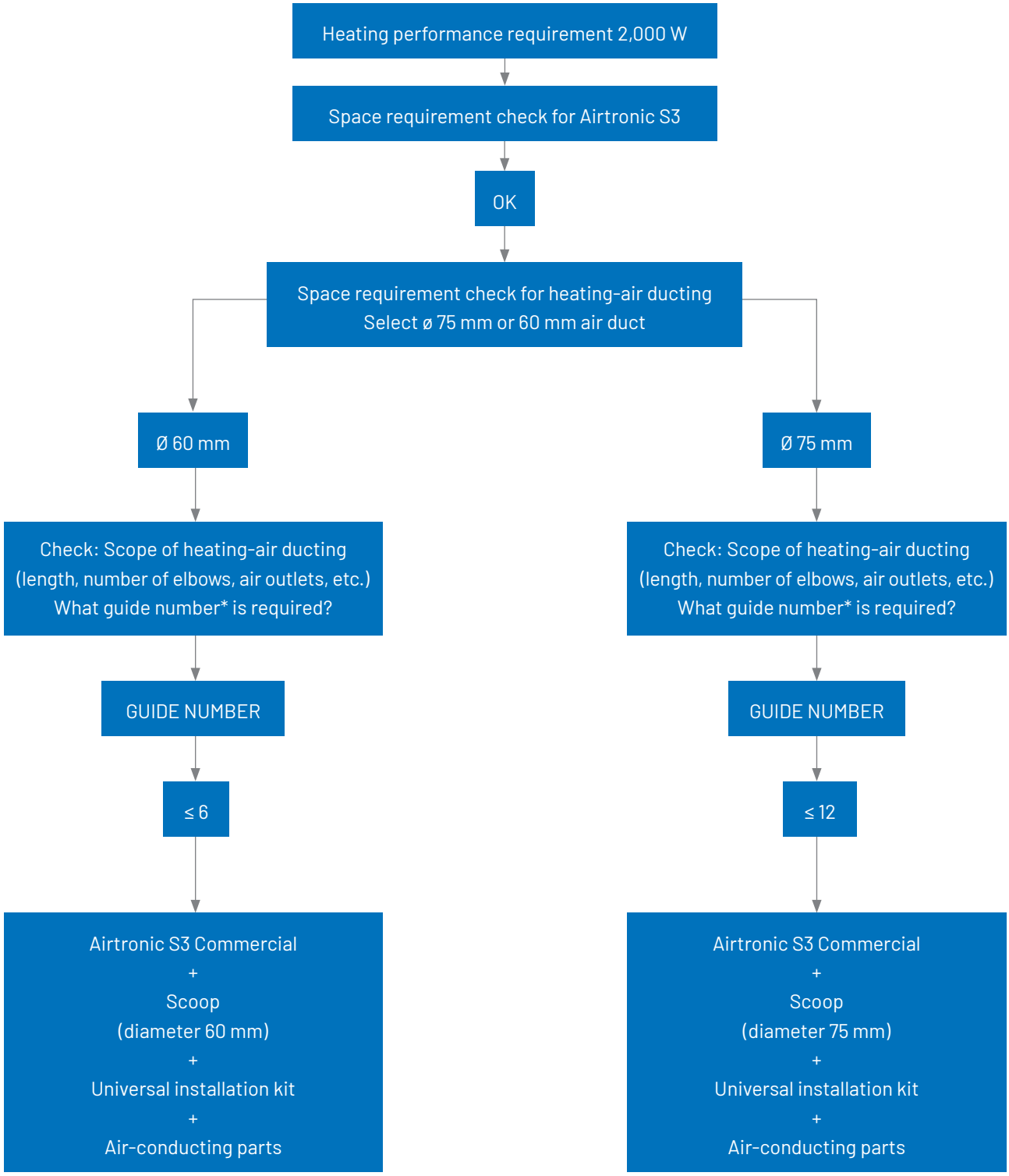

1
2
3
4
5

* **Guide Number:**

- Each component of the heating-air ducting (air hose, curved sections, vents, etc.) has a line guide number.
- The sum of these line guide numbers must not be greater than the guide number for the heater, otherwise the heater could malfunction. e.g. overheating.
- The higher the guide number for the heater, the more heating-air ducting components may be connected. Please refer to Eberspächer's Accessories catalog for a detailed explanation of guide numbers.

SELECTING THE AIR HEATER

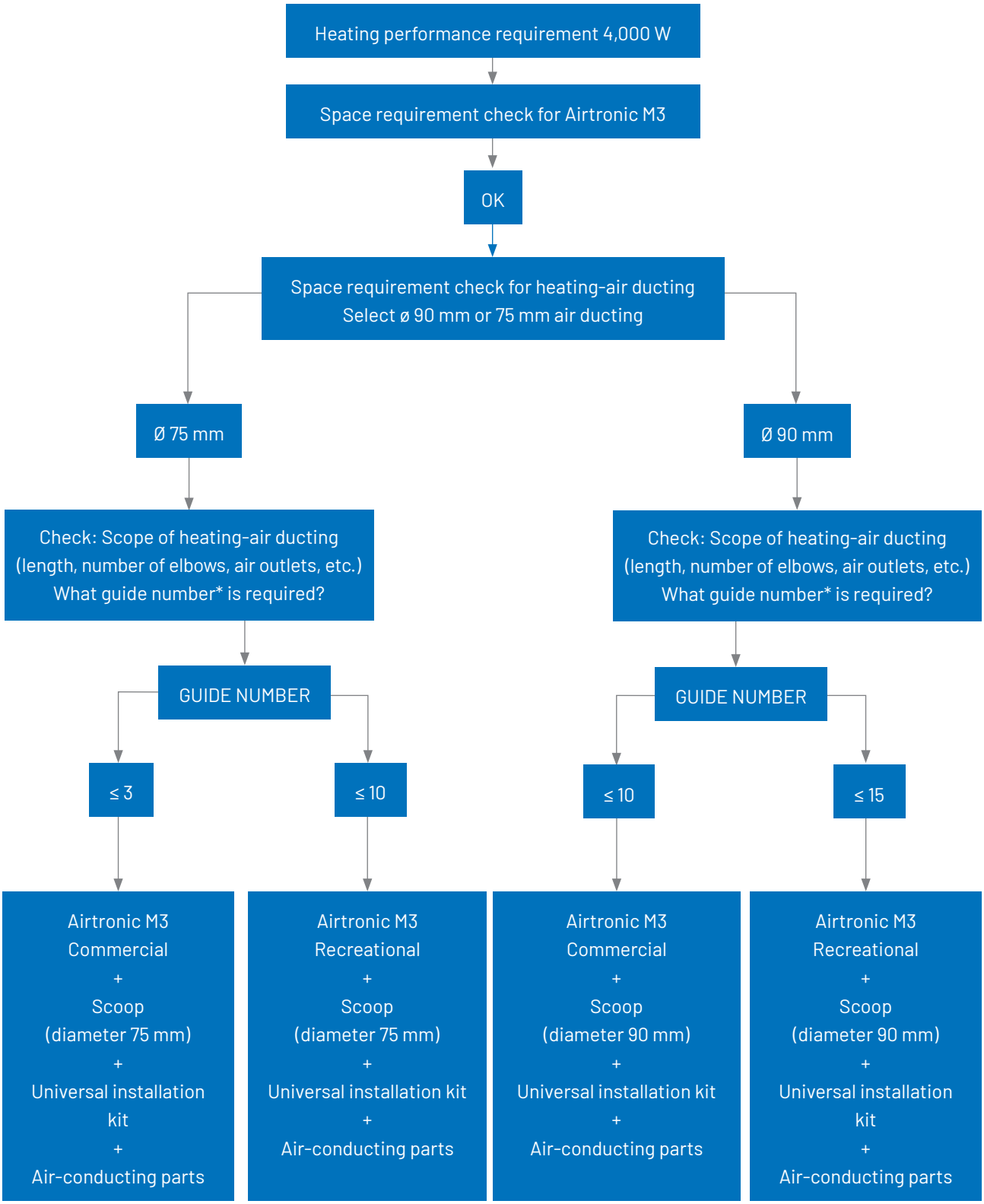

DUCTING RATING GUIDE

General notes on heating-air ducting:

Heating-air-conducting parts can also be mounted onto the heater. Each part has a line guide number that indicates the reduction in the heating-air throughput. In order to give you the opportunity to check that the installation you have planned does not reduce the heating-air throughput to an impermissible level, we have calculated a heater guide number for each heater and a line guide number for the heating-air-conducting parts; see information in the guide number tables:
0 = no temperature increase,
– = no line guide number.

The total of the line guide numbers of the heating-air-conducting parts connected to the heater must not be greater than the heater guide number, as otherwise the air outlet temperature would be impermissibly high, the heat distribution would be uneven and the overheating sensor would respond. If the total of the line guide numbers is greater than the heater guide number, the total can be reduced by selecting a larger diameter for the air ducts or switching from a one-duct to a two-duct system.

1-duct means:
One heating-air duct leads to or from the heater. The line guide numbers under "1-duct" apply.

2-duct means:
Behind the heater, the heating-air line divides into two ducts. Up until this branch, the line guide numbers specified under "1-duct" apply, from the branch onwards the line guide numbers under "2-duct" apply.
When using two air ducts or multiple air outlets, at least one of the ducts must be permanently open.

The branch that can be closed must not be taken into account when calculating the total of the line guide numbers.

Rule of thumb:

Double the cross-section or two identical parts installed in parallel = 1/4 of the guide number.

Example:
Hose Ø 60,
Cross-section area A = 19.6 cm^2, guide number 1.0
Hose Ø 75,
Cross-section area A = 44.2 cm^2, guide number 0.25

With smooth welded pipes, the line guide number is only half of the flexible hose with the same diameter (i.e. double pipe length).

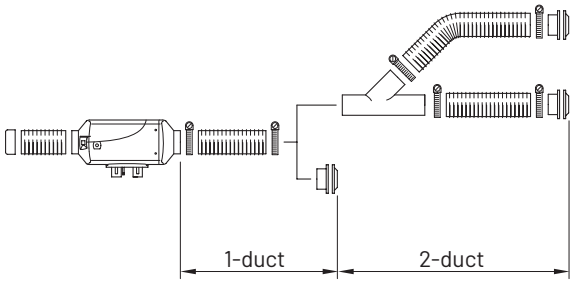

With innovative air flow regulating elements:

In order to counteract the non-uniform distribution of warm air in multi-duct systems with several air outlets, we have developed innovative air flow regulating elements that are simply clipped into the hose connection fitting of the air outlet. These regulating elements, reduce the flow cross section as needed and thereby decrease the emerging air flow. Available for fitting diameters 60, 75 and 90 mm.



DUCTING RATING GUIDE

The new range of air outlets:

Particularly colorfast and durable even at high temperatures, the covers of our completely re-designed range of air outlets are impressive, featuring a streamlined and high-quality design that allows for a variety of flow directions. They are available in white and black, allowing seamless integration into any interior.

- Clear, simple system thanks to the modular design.
- Plug-in connections between the cover and fitting or fitting and air hose for easy assembly.
- Fittings available in 50, 60, 75 and 90 mm.



Example calculation for heating-air ducting:

Airtronic: Heater guide number = 6

NO.	DESIGNATION	LINE GUIDE NUMBER
1	Protective grille	0
2	Connectors Ø 60	0
3	Flex. pipe Ø 60, 0.3 m long	0.3
4	Flex. pipe Ø 60, 1.0 m long	1.0
5	Straight scoop Ø 60	0
6	1 x 90° elbow, flex. pipe	0.6
7	Rotating air outlet	1.4
Total of the line guide numbers		3.3

Total of line guide numbers, 3.3, does not exceed the heater guide number 6, so the installation is permissible.

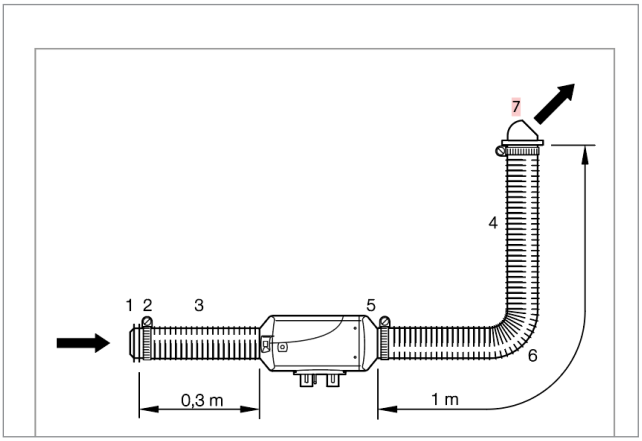

Overview of air guide numbers Airtronic 3/Airtronic 2

Air heater	Scoop	Air guide number
Airtronic S3 Commercial B2L/D2L Airtronic S2 D2L	Diameter 60	6
	Diameter 75	12
	Ball 60	1.2
	Ball 75	6
Airtronic M3 Commercial D4L/B4L Airtronic M2 Commercial D4L/B4L	Diameter 75	3
	Diameter 90	10
	Ball 75	1
	Ball 90	5
Airtronic M3 Recreational D4R/B4R Airtronic M2 Recreational D4R/B4R	Diameter 75	10
	Diameter 90	15
	Ball 75	8
	Ball 90	10
Airtronic L3 Commercial D6L	Diameter 90	10
Airtronic L3 Commercial D6L	Diameter 90 with adapter solution for 100	11
Airtronic XL3 Commercial D8L	Diameter 90 with adapter solution for 100	10

DUCTING RATING GUIDE

GENERAL TIPS ON HEATING AIR DUCTING AND COMPONENT RATINGS

A heater has the biggest heating air throughput when it can operate with the air blowing freely. Heating air ducting components reduce the throughput. To enable you to check whether or not the installation you plan reduces the air throughput to an inadmissable degree, we have calculated a heater rating for each heater and a component rating for each heating air ducting component:

0 = no temperature increase

- = no component rating

The sum of component ratings for the heating air ducting components must not exceed the heater rating, otherwise the outlet temperature will become too high and trigger the safety cutout switch. If the sum of the component ratings exceeds the heater rating, it can be reduced by selecting a larger diameter for the air ducting parts.

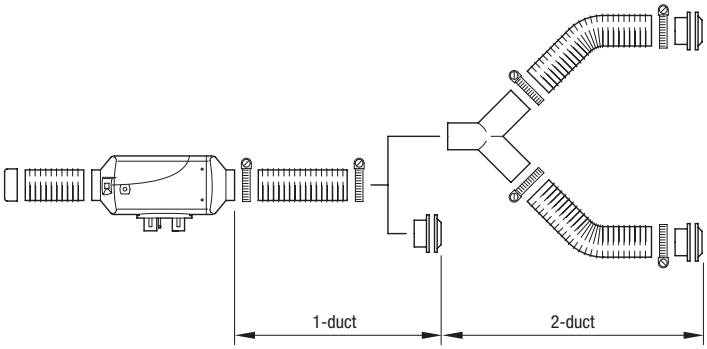

ITEM	DESIGNATION	COMPONENT RATING
1	Protective grille	0.5
2	Connection piece 60mm dia.	0
3	Flex. pipe, 60mm dia. 0.3m long	0.3
4	Flex. pipe, 60mm dia, 1.0m long	1.0
5	Reduction hood 60mm straight	0
6	1 x 90° bends of flex. pipe	0.2
7	Swivel outlet	3.2
	Total Component Rating	5.2

RULE OF THUMB:

Double the cross-section or two identical components running parallel = 1/4 of the rating.

Example:

50 diameter hose

A = 19.6 cm2, R rating 1.0

The component rating of smooth welded pipes is only half that of flexible pipe of equal diameter (e.g. double the pipe length).

75 diameter hose

A = 44.2 cm2, R rating 0.25

MAIN-LINE DRAWING FOR 1-DUCT AND 2-DUCT HEATING AIR SYSTEM

1-DUCT MEANS:A heating duct leads to or from heater. The component ratings under "1-duct" are valid.

2-duct means:The heating air line branches into two ducts after the heater. Up to the branch the component ratings under "1-duct" are valid, after the branch they fall under "2-duct". If an adjustable outlet is used in the 2-duct heating system, one duct must be unclosable.

Note: When determining the sum of the component ratings, do not take the closable duct into consideration.

EXAMPLE OF HEATING AIR DUCTING FOR AIRTRONIC D2

Heater Rating = 6

Rating sum = 5.2 and does not exceed the heater rating of 6.

The installation is permissable.

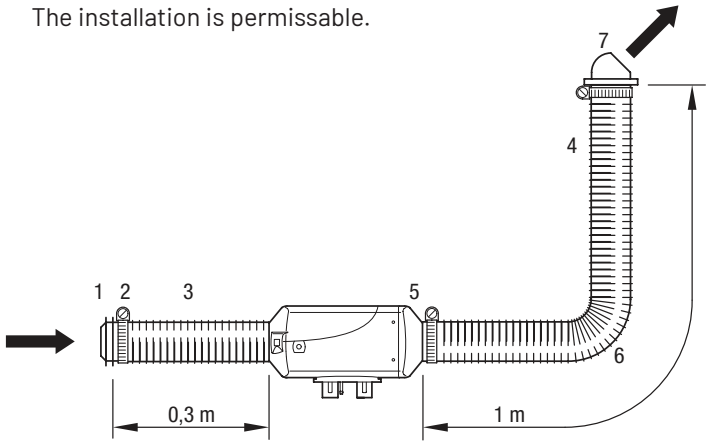

GUIDE NUMBERS

Airtronic S3 Commercial

Heater guide number 6 – with air scoop Ø 60

Heater guide number 12 – with air scoop Ø 75

The drawing shows the application options for the main air-conducting parts. There are no installation examples.

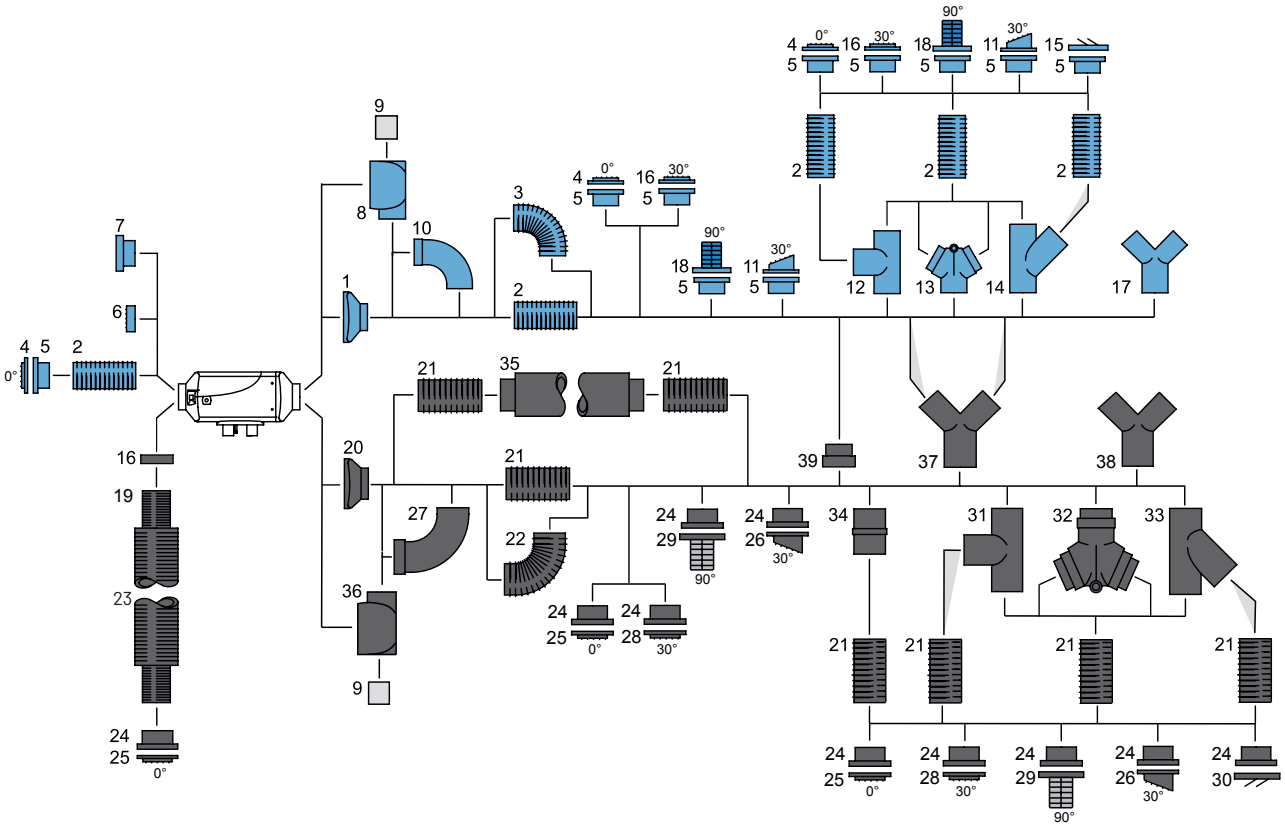

GUIDE NUMBERS

No.	Designation (dimensions in mm)	Line guide number 1-duct	Line guide number 2-duct	See section Air-conducting parts
	Heating-air ducting with scoop Ø 60 (heater guide number 6)			
1	Scoop, Ø 60	0	0	2
2	Flex. pipe Ø 60 per m	1.0	0.25	9
3	90° elbow, flexible pipe	0.6	–	–
4	Flat air outlet 0° with fitting Ø 60	0.5	0.1	18.1
5	Fitting Ø 60	0	0	16
6	Heater grille, Ø 60	0	–	25
7	Air filter, Ø 60	1.6	–	
8	Ball-shaped scoopØ 60	4.8	–	2
9	Connection fitting Ø 50 for ball-shaped scoopØ 60 Ø 75	4.5	–	
10	Pipe elbow 90° Ø 60	4	–	11
11	Upright air outlet 30° with fitting Ø 60	3.2	0.8	16.2
12	T-junction	1.4	0.25	12
13	Butterfly valve Ø 60/60/60 with "right/left" flap position	–	0.6	14
14	Y-junction	–	1	13
15	Closable air outlet Ø 50/60	–	–	19
16	Flat air outlet 30° Ø 50/60	0.7	0.2	18
17	Symmetrical metal Y-junction Ø 60/50/50	–	0.3	13,2
18	Upright air outlet 90° Ø 50/60	3.2	n/a	17
	Heating-air ducting with scoop Ø 75 (heater guide number 12)			
19	Adapter			
20	Scoop Ø 75	0	0	2
21	Flex. pipe Ø 75 per m	1	0.25	9
22	90° elbow of flex. pipe Ø 75	0.2	–	9
23	Intake silencer Ø 75	0.7	–	
24	Fitting Ø 75	0	0	
25	Flat air outlet 0° Ø 75/90 with fitting Ø 75	0.6	0.1	18.1
26	Upright air outlet 30° Ø 75/90 with fitting Ø 75	0.5	0.15	16.2
27	Pipe elbow 90° Ø 75	4.5	–	11
28	Flat air outlet 30° with fitting Ø 75	0.5	0.15	18
29	Upright air outlet 90° with fitting Ø 75	0.8	0.15	17
30	Closable air outlet Ø 75/90 with fitting Ø 75	0.6	0.2	18
31	T-junction Ø 75/75/75	–	0.8	12
32	Butterfly valve Ø 75/75/75 Flap position "left/right" Flap position "center"	–	1.2	14
33	Y-junction Ø 75/75/75	–	0.6	13
34	Hose connector fitting Ø 75	0.5	0.1	23
35	Silencer Ø 75	0.6	–	24
36	Ball-shaped scoopØ 75	6	–	2
37	Symmetrical plastic Y-junction Ø 75/60/60	–	0.8	13.2
38	Symmetrical metal Y-junctionØ 75/50/50	–	0.9	
39	Adapter Ø 75 – 60	3.2	–	6.1

GUIDE NUMBERS

Airtronic M3 Commercial

Heater guide number 3* – with air scoop Ø 75

Heater guide number 10* – with air scoop Ø 90

The drawing shows the application options for the main air-conducting parts. There are no installation examples.

* Heater guide numbers for the Airtronic M3 Recreational are different

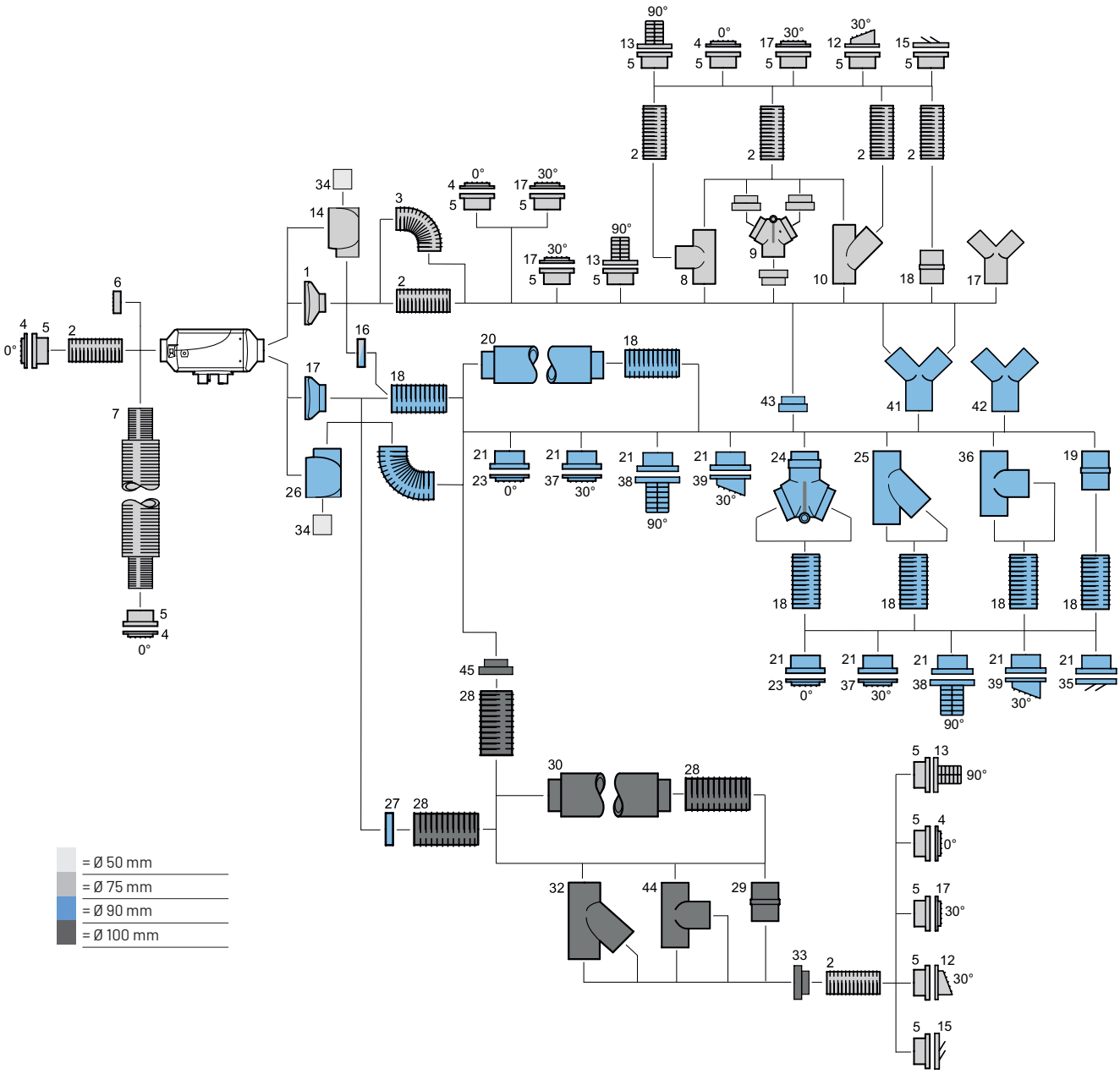

GUIDE NUMBERS

No.	Designation (dimensions in mm)	Line guide number 1-duct		Line guide number 2-duct		See section Air-conducting parts
		Ø 75	Ø 90	Ø 75	Ø 90	
	Heating-air ducting with scoop Ø 75 (heater guide number 3)					
1a	Scoop Ø 75	0	–	–	–	2
2	Flex. pipe Ø 75 per m	1	–	0.25	–	9
3	90° elbow of flex. pipe Ø 75	0.2	–	–	–	9
4	Flat air outlet 0° with fitting Ø 75	0.4	–	0.1	–	18.1
5	Fitting Ø 75	0.0	–	0.0	–	16
6	Grille Ø 75	2.0	–	–	–	25
7	Intake silencer Ø 75	0.8	–	–	–	
8	T-junction Ø 75	–	–	0.5	–	12
9	Butterfly valve Ø 90/90/90 with adapters 75/90	–	–	1.8	–	14
10	Plastic Y-junction Ø 75/75/75	–	–	0.6	–	13
11	Flat air outlet 30° with fitting Ø75	0.4	–	0.1	–	18
12	Upright air outlet 30° with fitting Ø 75	0.6	–	0.2	–	16.2
13	Upright air outlet 90° with fitting Ø 75	1.1	–	0.3	–	17
14	Ball-shaped scoop Ø 75	2.0	–	–	–	2
15	Closable air outlet with fitting Ø 75	–	–	–	–	19
16	Ring Ø 75/90	0.5	–	–	–	21
17	Symmetrical plastic Y-junction Ø 75/60/60	–	–	0.9	–	13,2
18	Hose connector	0.5	–	0.1	–	23
	Heating-air ducting with scoop Ø 90 (heater guide number 10)					
1b	Scoop Ø 90	–	0	–	–	2
18	Flex. pipe Ø 90 per m	–	1	–	0.25	9
19	Hose connector fitting Ø 90	–	0.5	–	0.1	23
20	Silencer Ø 90	–	0.7	–	–	24
21	Fitting Ø 90	–	0	–	0	16
23	Flat air outlet 0° with fitting Ø 90	–	1.1	–	0.3	18
24	Butterfly valve Ø 90/90/90	–	1.2	–	–	14
25	Y-junction Ø 90/90/90	–	–	–	0.3	13
26	Ball-shaped scoopØ 90*	–	5.0	–	–	2
27	Ring Ø 90/100	–	0	–	–	21
28	Flexible pipe Ø 100 per m	–	0.4	–	–	9
29	Hose connector fitting Ø 100	–	0.1	–	–	23
31	Rotating air outlet Ø 100	–	2.1	–	0.5	
32	Y-junction Ø 100/100/100	–	–	–	0.5	13
33	Adapter Ø 75 – 100	–	–	–	0.8	6.1
34a	Connection fitting 50 for Ø 75	–	–	–	1.0	
34b	Connection fitting 50 for Ø 90	–	–	–	2.5	
35	Closable air outlet with fitting Ø 90	–	–	–	–	19
36	T-junction Ø 90	–	–	–	0.6	12
37	Flat air outlet 30° with fitting Ø 90	–	2.0	–	0.4	18
38	Upright air outlet 90° with fitting Ø 90	–	2.7	–	0.3	17
39	Upright air outlet 30° with fitting Ø 90	–	2.4	–	0.6	16.2
40	90° elbow of flex. pipe Ø 90	0.1	–	–	–	9
41	Symmetrical plastic Y-junction Ø 90/75/75	–	–	–	0.9	13.2
42	Symmetrical plastic Y-junction Ø 90/60/60	–	–	–	2.1	13.2
43	Adapter Ø 75 – 90	–	3.3	–	–	6.1
44	T-junction Ø 100	–	–	–	0.4	12
45	Adapter Ø 90 – 100	–	0.4	–	–	6.1

* Cannot be used with the Airtronic D4Plus, D4R and B4R

GUIDE NUMBERS

Airtronic L3

Heater guide number 10

The drawing shows the application options for the main air-conducting parts. There are no installation examples.

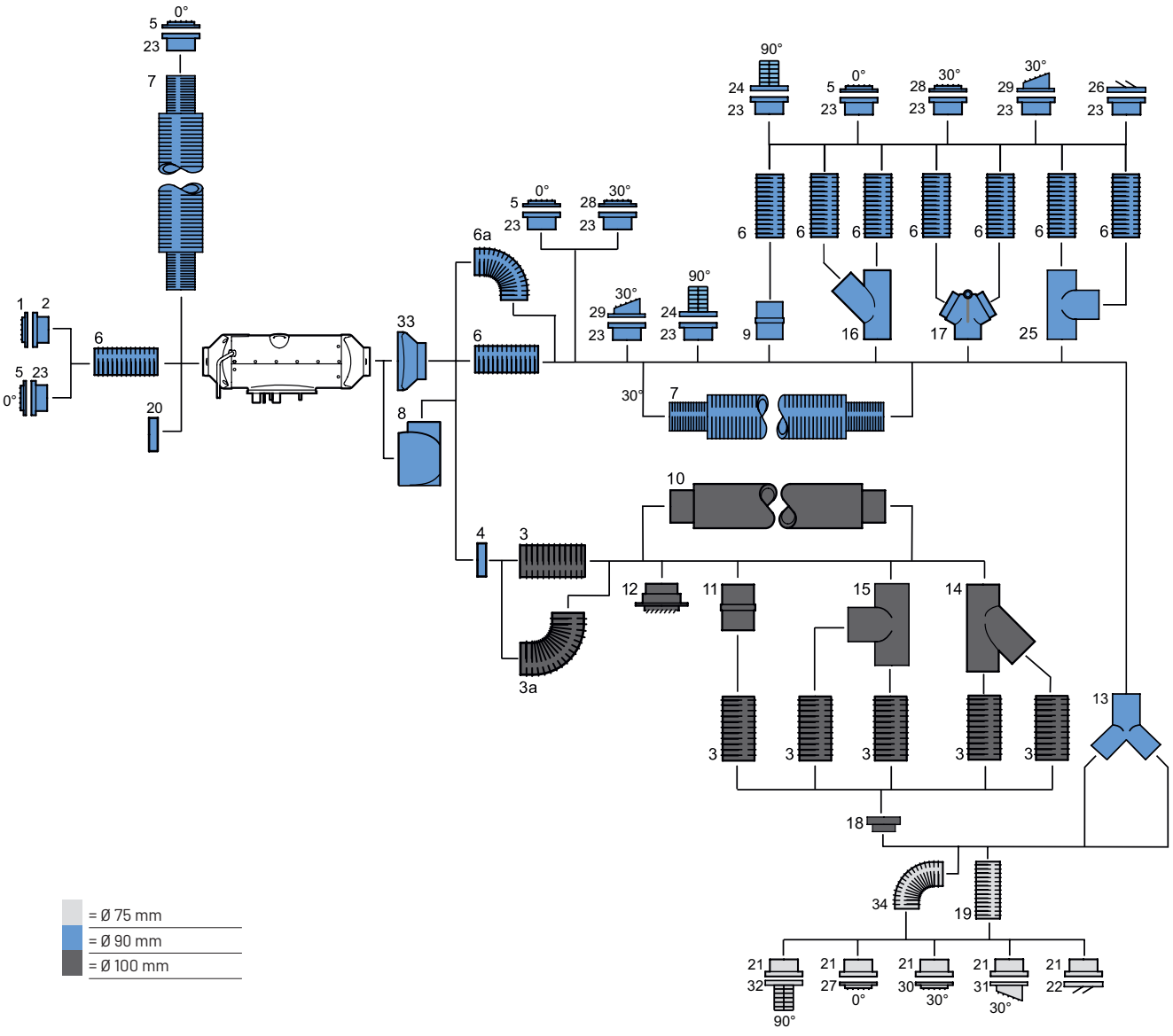

GUIDE NUMBERS

No.	Designation (dimensions in mm)	Line guide number 1-duct	Line guide number 2-duct	See section Air-conducting parts
	Heating-air ducting with scoop Ø 90 (heater guide number 10)			
1	Air outlet Ø 90, metal grille	0.6	0.2	7
2	Hose fitting Ø 90	0	0	8
3	Flexible pipe Ø 100 per m	0.6	0.2	9
3a	90° elbow of flex. pipe Ø 100	0.6	–	9
4	Adapter Ø 90/100	0	–	6.1
5	Flat air outlet 0° with fitting Ø 90	1	0.2	18.1
6	Flexible pipe Ø 90 per m	1	0.25	9
6a	90° elbow of flex. pipe Ø 90	0.2	–	9
7	Intake silencer Ø 90	0.8	–	24
8	Ball-shaped scoopØ 90	8	–	2
9	Hose connector fitting Ø 90	0.5	0.1	22
10	Silencer Ø 100	0.5	–	24
11	Hose connector fitting Ø 100	0.4	0.1	23
13	Symmetrical plastic Y-junction Ø 90/75/75	–	0.9	13.2
14	Y-junction Ø 100/100/100	–	0.5	13
15	T-junction Ø 100/100/100	–	0.5	12
16	Y-junction Ø 90/90/90	–	0.6	13
17	Butterfly valve Ø 90/90/90	–	1.1	14
18	Adapter Ø 75 – 100	3.2	–	6.1
19	Flexible pipe Ø 75 per m	4	1	9
20	Plastic heater grille, ø 90	2	–	25
21	Fitting Ø 75	0	0	16
22	Closable air outlet with fitting Ø 75	–	–	19
23	Fitting Ø 90	0	0	16
24	Upright air outlet 90° with fitting Ø 90	3	0.8	17
25	T-junction Ø 90/90/90	–	0.6	12
26	Closable air outlet with fitting Ø 90	–	–	19
27	Flat air outlet 0° with fitting Ø 75	2.5	0.7	18.1
28	Flat air outlet 30° with fitting Ø 90	1.7	0.4	18
29	Upright air outlet 30° with fitting Ø 90	2.3	0.6	16.2
30	Flat air outlet 30° with fitting Ø 75	2.7	0.8	18
31	Upright air outlet 30° with fitting Ø 75	2.1	0.5	16.2
32	Upright air outlet 90° with fitting Ø 75	4.7	1.2	17
33	Scoop Ø 90	0	0	–
34	90° elbow of flex. pipe Ø 75	1	0.25	9

* Item 4 – when using as adapter Ø 90 / 100, cut out the grille

ELECTRIC HEATERS

HIGH VOLTAGE PTC COOLANT HEATER FOR ELECTRIC VEHICLES - CHHV 50 G 3 T / 70 G3 T

Note:

- The high voltage heater is strictly OEM product, available only to vehicle and body manufacturers.
- Not available for aftermarket installations/replacements. Because of it's nature, the heater comes without certification and has to be certified together with the vehicle .

3rd GENEREATION HIGH VOLTAGE COOLANT HEATER

- HV electrical coolant heater for automotive use
- Specified for a voltage range which is typical for electrical/hybrid/fuel cell vehicles
- Application as:
  - Vechicle interior heating
  - Battery conditioning
  - Other coolant circuit applications
- PTC Technology

HIGH-VOLTAGE ELECTRICAL HEATER TITRONIC CHHV 50 G 3 T / 70 G 3 T

The third generation of high-voltage PTC water heaters for electric vehicles

- Reliable and powerful PTC technology offering a high heating performance of 5 kW or 7 kW
- Six heat settings
- Already installed in millions of hybrid/electric vehicles worldwide
- PTC elements allow intrinsically safe operation of the heater
- Small installation space required

Description	Part Number
Titronic CHHV 50 G3 T	21.2203.05.0000
Titronic CHHV 70 G3 T	21.2202.05.0000

SPECIFICATIONS			
TITRONIC CHHV		50G3T	70G3T
Operating voltage range	HVV	250-500	250-500
Control voltage range	LVV	8-16	8-16
Heating Perfomance*	W	5,000	7,000
Heating Perfomance control	%	0-100	
Burst pressure	bar		
Weight	Kg	2.0	2.5
Interface	LIN2.1		
IP type of protection		IP6K9K, IP67	
Dimensions		184x141x105	220x141x123
ISO 26262		Compliant	
Operating temperature range C		-40 to 120	

*Un = 360 V, T co = 60 C, Oco" 10 l/min, Coolant = 50:50

CHHV 50 G3T / CHHV 70 G3T

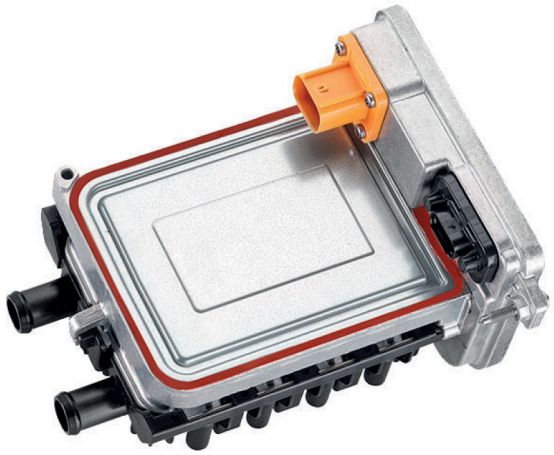

MOBILE HANDIWASH / MINIWASH



	Part Number
Handiwash 12V Standard	29.2100.01.6331
Handiwash 24V Standard	29.2100.01.6332

Note:
Manual on/off switch and relay required
(not supplied)

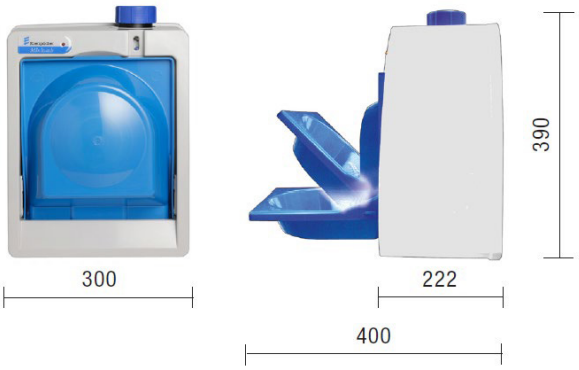

Miniwash 12V Standard (Hot Water Only)	29.2100.01.6416
Miniwash 24V Standard (Hot Water Only)	29.2100.01.6417

Note:
Manual on/off switch and relay required
(not supplied)

Waste Water Catchment Tank 10L / 2.64 Gal	29.2199.01.9139

THERMOLINE



	Part Number
EUROPEAN THERMOLINE 300W METRIC Ø 10mm	29.2150.00.0006
EUROPEAN THERMOLINE 450W METRIC Ø 10mm	29.2150.00.0008
EUROPEAN THERMOLINE 600W METRIC Ø 10mm	29.2150.00.0009

OFF HWY heater kits from UK (CAT and Komatsu)

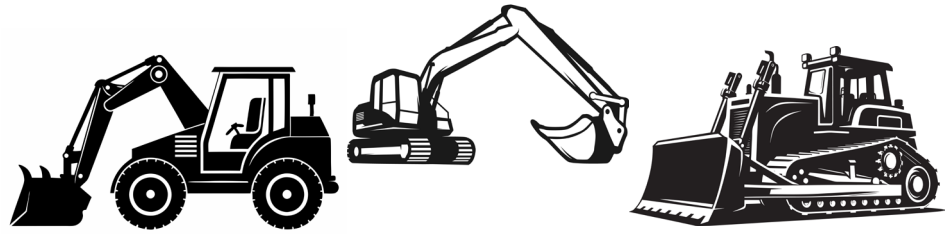

		Heater	Harness	Fuel System	Air Ducting	Heater Mounting hardware	EasyStart PRO	Fuel shutoff valve	Exhaust & Intake Pipe	Header tank SS/2.5L/0.67 gal	Silencio 2 HV 24V + hardware	Alize 2 VI HV 24V + hardware	Baikal 3 HV 24V + hardware
FIN 3 S'IES EXCAVATOR HS3 24V ALIZE ESP	29.2135.00.0079	■	■	■		■	■	■	■	■		■	
FIN 352 24V HS3 D5L ALIZE VI ESP A	29.2135.00.0085	■	■	■		■	■	■	■	■		■	
FIN 395 24V HS3 D5L ALIZE VI ESP A	29.2135.00.0084	■	■	■		■	■	■	■	■		■	
FIN 730ADT HS3 24V ESP ALIZE 2 VI C	29.2135.00.0075	■	■	■		■	■	■	■	■		■	
FIN 775 24V HS3 D5L ALIZE VI ESP A	29.2135.00.0086	■	■	■		■	■	■	■	■		■	
FIN 938M AS3 24V ES PRO 1 OUTLET A	29.2113.00.0059	■	■	■	■	■	■	■	■				
FIN 938M HS3 D5L 24V *NO MATRIX* A	29.2135.00.0087	■	■	■		■	■	■	■	■			
FIN 950/980XE HS3 24V BAIKAL 3 ESP C	29.2135.00.0077	■	■	■		■	■	■	■	■			■
FIN MH3022 24V HS3 D5L ESP ALIZE2 VI C	29.2135.00.0076	■	■	■		■	■	■	■	■			■
KOM WA-380 HS3 24V SILENCIO 2 HV A	29.2135.00.0088	■	■	■		■	■	■	■	■	■		
KOM WA-475 HS3 24V BAIKAL 3 ESP A	29.2135.00.0083	■	■	■		■	■	■	■	■			■
KOM WA-500 HS3 24V (EVAP) ESP *	29.2135.00.0091	■	■	■		■	■		■	■			



Alize 2 VI HV 24V
3.4 kW - 11601 BTU/hr



Baikal 3 HV 24V
4 kW - 13,648 BTU/hr



Silencio 2HV 24V
5.5 kW - 18,766 BTU/hr

NOTES:

Eberspaecher Climate Control Systems
(800) 387-4800
(905) 670-0960
(905) 670-0728 Fax
www.eberspaecher-climate.com

Eberspächer

Version August 1st, 2026
Subject to change without notice.