CARTGO 6 MANUAL



The technical description and installation instructions are valid for the following ECHO 6 Kit:

CARGO AX3 4/6 Wall - No HTR*	20 2829 59 0463

(* Without D6L heater and outlet hood)

A WORLD OF COMFORT

Eberspächer

DRAFT #1 – Stand: 02.2025 – NCN Design & Illustration: 02/16/2025

TABLE OF CONTENTS

CHAPTER	CHAPTER TITLE CHAPTER CONTENTS	PAGE
1	INTRODUCTION	
	Picture Symbols and Text Structures	3
	Disclaimer / Exclusion / Limitation	3
	Compliance	3
2	PRODUCT INFORMATION	
	Eberspaecher's CARGO 6 and Nomenclature	4
	Technical Data	5
	Cutaway View: D6L Heater	6
	Main Dimensions (D6)	7
	Name Plate	8
3	INSTALLATION PROCEDURES	
	Installation Procedures, Preparation, Tools & Equipment and Opening Package	9
	Mounting Procedure - CARGO 6 Heater Assembly	11
	Mounting Footprints	12
	Mounting Procedure - Ducting System	13
	Flow Distribution Ratio within Y Connector, Duct Channel Types	14
	Duct System - Layout Types	15
	Duct System Rating – AIRTRONIC AX3 D6L	16
	Airtronic AIRTRONIC AX3 D6L (Duct / Component Rating)	17
	Mounting Procedure - FMP System	18
	Fuel System Dimentions and Fuel Quality	19
	Mounting Procedure - Fuel Pick-Up	20
	Mounting Procedure - Intake and Exhaust Pipe System	21
	Mounting Procedure - Electrical System	22
	EasyStart PRO - Technical Data	24
	EasyStart PRO - Operation modes	25
	Connection CAN Line	26
	Installing EasyStart PRO	27
	HMI Enclosure with EasyStart PRO	28
	EasyStart PRO - Initial Comissioning	29
	Fault Diagnosis and Remedy	31
	CARGO 6 Wiring Diagram	32
	Commissioning Procedure - CARGO 6 Assembly	36
4	FUNCTION AND OPERATION	
	Function Description	37
5	BASIC TROUBLESHOOTING AND SERVICE PROCEDURES	
	Basic Troubleshooting	39
	EasyScan Installation	41
	EasyScan Diagnostics - CARGO 6	48
	Fault Codes	50
	Fuel Quantity Test - D6L and Control Values	55
6	PARTS LIST	
	Spare Parts Diagram - 12V AL3 D6L Heater	57
	Spare Parts List - 12V AL3 D6L Heater	58
	Spare Parts Diagram - CARGO 6	59
	Spare Parts Diagram - CARGO 6 Duct System	61
	Spare Parts List - CARGO 6 Duct System	62
7	TECHNICAL, WARRANTY & QUALITY	
	Warranty, Certification, Health & Safety, Disposal	64
	Contact Us	64
8	NOTES	65

1 INTRODUCTION

The aim of this manual is to assist installers, end users, and technicians during the installation, operation, and maintenance of the AL3 D6L heater system in the CARGO 6 version by offering an essential technical information. This manual primarily emphasizes the general procedures for mounting and commissioning the CARGO 6. It also covers essential topics such as the setup processes for the Easystart Pro controller and Easycan diagnostics. For additional information regarding the AL3 D6L heater, please consult its technical manual. In case of CARGO 6 with AM3 4KW heaters (i.e. D4R, B4R, etc), please follow heater specific guidelines mentioned in its own technical manuals or contact Eberspaecher technical support.

This manual contains safety instructions with intention of alerting installer /user to avoid unintended failures and accidents; therefore,

Critical safety related information and important notes are available with specific text structure and symbols as shown below:

PICTURE SYMBOLS, PRESENTATION AND SPECIAL TEXT STRUCTURES

DANGER!: Indicates that serious or fatal injury may result if specific guidelines are not followed.

CAUTION!: Indicates that personal injury or damage to equipment may occur unless specific guidelines are followed.

WARNING!: Indicates very important heater information that may cause personal injury, heater failures and maintenance costs.

REGULATION!: Indicates important applicable notes regarding regulation for generic cargo installations.

NOTE: Indicates general heater related notes, clarifications and recommendations, which can be very useful for technician, installer, or owner; and should not be disregarded.

(▪) A dot indicates a list, which is started with heading;
(-) If indented dash follows a “dot”, this list is a sub section of the black dot;
(*) An asterisk symbol describes a further note related to its associated title, statement or data.
(1) A number or alphabet within bracket shows a list of process steps, or parts in drawing.

DISCLAIMER / EXCLUSION / LIMITATION

- This document is only related to applicable heater assemblies listed on the title page, to the exclusion of all liability claims, and aims to support registered dealers, service technicians and end users in North America. Any product related Information available herein does not replace or supersedes any related documentation produced by Eberspaecher Germany.
- This manual is not intended for product installation in mining, marine or recreational vehicle environments. Installation for such applications are not allowed without prior consultations with Eberspaecher Climate Control Systems.
- This documentation should only be regarded as as a supplementary guideline for warranty or related matters. If a user or dealer wants primary information about the warranty process, they should consult the most up to date warranty documentation from Eberspaecher.
- Eberspaecher takes regular steps to ensure that any content, illustrations and technical data in its manuals are correct; however errors do occur, and Eberspaecher Climate Control Systems reserves right to correct such errors, and disclaims liability resulting therefrom.
- Any technical information related to the heating system (i.e., heater data, illustration, table, calculation, and graph) in this manual gives a generic technical guidance for installers and dealers. It does not, however, replace or supersedes any application specific standards, rules and regulations.
- Prior to carry out installation or operation of the heating system, user/installer is responsible for referring and understanding contents of the manual.
- Eberspaecher is not liable for any negligence and incompetence from dealers, installers and owners thereby causing heater or any related system failures and do reserves rights to nullify the warranty under such conditions.
- Non-standard product usage i.e. counterfeit parts, improper installation, abnormal function, or incorrect service procedure is considered as abuse and prohibited; therefore, excludes Eberspaecher Climate Control Systems from any product liability i.e. warranty, etc.

COMPLIANCE

REGULATION!

- The Federal Road Transport Directorate has issued “EC type approval” and an “EMC type approval” for the 12V AL3 D6L heater for installation in motor vehicles . Type approval number (see below) is also available on the heater name plate:

Airtronic L3	E1 10 R – 068879 122 R – 000574

NOTE

- It is essential to adhere to vehicle manuals, manufacturer guidelines, industry standards, and local regulations as applicable, in conjunction with this manual.
- This manual contains specific instructions or notes advising contact with an authorized Eberspaecher dealer or technical support for additional information, which is essential for ensuring optimal product performance, reliability, and safety.
- This manual is available exclusively in English and in a digital format.

1 Introduction
Here you will find important introductory information and structure of the manual.

2 Product Information
Here you will find information about the scope of supply, the technical data and the dimensions of the heater assembly.

3 Installation Procedures
Here you will find information about the necessary product installation, set up and commissioning steps.

4 CARGO 6 Operation and Functional Safety
Here you will find information about the product operation and functional safety controls.

5 Basic Troubleshooting Procedures
Here you will find information about any basic troubleshooting steps and EasyScan diagnostic procedures.

6 Parts List
Here you will find spare part numbers and diagrams of heater components.

7 Technical, Warranty & Quality
Here you will find a brief information related to product warranty, quality and disposal.

2 PRODUCT INFORMATION

EBERSPAECHER'S CARGO 6

The third generation of the CARGO product line "CARGO 6", offers dependable heating solutions to keep cargo at a comfortable temperature in medium - and large - sized truck trailers and containers. CARGO 6 significantly improves product quality and safety with improved design characteristics like longer life, greater performance, and smarter control. CARGO 6 is mainly mounted on the wall using "wall mounted L bracket", but also comes in another variant where heater can be mounted on the floor using "floor mounted bracket".

NOTE

The scope of this manual is mainly to provide the technical information related to CARGO 6 heater systems mounted on the wall, but also covers some elements related to installation of the heater system mounted on the floor.

CARGO 6 is an install kit (without heater and outlet hood) meaning it requires suitable size and type of heater as well as its hood for complete installation. It is primarily designed to work with 12V AL3 D6L heater and its 90 mm hood. But, it is also compatible with other smaller size 12V AM3 D4R heater. Additionally, CARGO 6 can be further modified to be compatible with other AM3 4KW variants i.e. 12/24V AM3 B4R or 24V D4R heaters.

NOTE

Contact Eberspaecher Technical support in case of application requires heater other than 12V AL3 D6L.

Scope of supply:

- **CARGO Install Kit 4/6 Wall mounted - 20 2829 59 0463:** Wall mounted bracket, 90 mm ID APK duct and parts, CARGO/ECHO 6 harness, 2 mm ID x 8m fuel line, 2mm x 26" fuel pick up tube, Easy Start PRO, ~~FMP~~, Combustion air and exhaust system.

NOTE

- CARGO 6 and related system components must be installed by an Eberspaecher authorized dealer according to, but not limited to, the information provided within this document.
- In order for the heating system to effectively deliver heat as needed, it is crucial to conduct a heat calculation before choosing a specific heater size, such as AL3 D6L. It is important to note that if a heating capacity is either too large or small, it cannot fulfill its intended purpose. For assistance in selecting the appropriate heater size, please reach out to the technical department of Eberspaecher Climate Control Systems.

§ It is responsibility of the installer/user to ensure local rules and regulations i.e. DOT are followed during product installation and operation.

Key Features:
- 12V DC
- Suitable for 4-6KW AX3 heaters*
- Wall/ Floor mounted bracket
- Advanced Combustion process and heat regulation
- Fault detection (i.e., LVD/HVD, component failure, Overheat, etc.)
- Digital Controller - Easystart PRO
- Diagnostic Capability with EasyScan
- Gasoline AX3 heater option*
- Dual Heater option*
- 24V Heater option*
- 110V AC option*

*Add on features available as an option

WARNING!
- Locate appropriate warning signs and safety instructions near by heating system if necessary
- Additional interlocking & safety controls are recommended if CARGO 6 is used for cargo application transporting livestock, hazardous or flammable goods.

DANGER:
- Never operate or turn on heater while vehicle at gas station or within risky or explosive environment i.e. welding, externally charging wet batteries, etc.
- Wall structure must be capable of withstanding static and dynamic loads from CARGO 6 assembly. Prior to initiate CARGO 6 mounting, Installer is responsible for ensuring the load carrying capacity of the front wall or adding reinforcement if necessary.
- Heater must be operated using fuel type and quality as specified in heater manual.
- This product may expose you to chemicals i.e. Lead, which is known to the State of California to cause cancer and or reproductive toxicity in both male and female. For more information go to www.P65warningsca.gov

Figure 2.1: CARGO 6 Heater Assembly

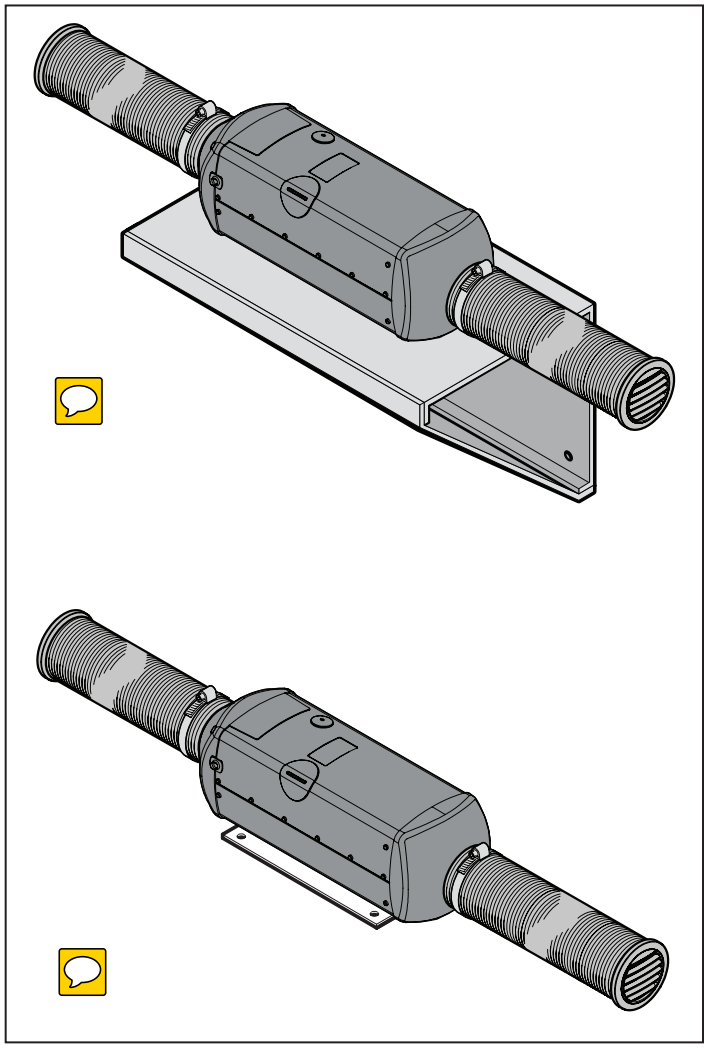

DRAFT #1 – Stand: 02.2025 – NCN Design & Illustration: 02/16/2025

2 PRODUCT INFORMATION

TECHNICAL DATA: CARGO 6 - AL3 D6L Heater Assembly (Table 2.1)

CARGO 6 AL3 D6L HEATER ASSEMBLY

Heater type			Airtronic L3					
Version			D6L					
Heating medium			Air					
Fuel			▪ Diesel – standard commercially available (EN 590).					
"Fuel quality" and "Fuel at low temperatures"on page 35.			▪ HVO (Hydrogenated Vegetable Oil), GtL (Gas-to-Liquid) (EN 15940)					
Control of the heat flow			Maximum		Minimum		Pause mode	
Heat flow (watt)			6000		1500		–	
Hot air throughput without backpressure (kg/h) with hood 90 mm			285		80		60	
Fuel consumption (l/h)			0.74		0.16		–	
Average electrical power consumption (watt)			12 V	24 V	12 V	24 V	12 V	24 V
		during	12 V: 90		12 V: 7		12 V: 6	
		operation	24 V: 95		24 V: 11		24 V: 9	
		while starting	12 V: ≤ 90 24 V: ≤ 85					
Closed-Circuit Power Consumption			100µA					
Rated Voltage			12 volt or 24 volt					
Operating range Lower voltage limit: Undervoltage protection installed in the control box switches off the heater on reaching the voltage limit.*)			approx. 10.5 volt or approx. 21.4 volt Undervoltage protection response time: 20 seconds ±1					
Upper voltage limit: Overvoltage protection installed in the control box switches off the heater on reaching the voltage limit.			approx. 16 volt or approx. 32 volt Overvoltage protection response time: 20 seconds					
Ambient Temperature	Heater	during operation	-40 °C to +70 °C					
		not in operation	-40 °C to +85 °C					
	Metering Pump	during operation	-40 °C to +50 °C					
		not in operation	-40 °C to +125 °C					
Hot Air Intake Temperature			max. +40 °C					
Combustion Air Temperature			max. +50°C					
Interference Suppression			Suppression class 5 to EN 55025					
Degree of Protection in Accordance with ISO 20653		during operation	IP5k4k					
		not in operation	IP5k6k and IP5k9k					
Weight approx.			7 kg					
Ventilation mode			possible					
Fuel Line Type			Plastic fuel line, 2 mm (ID), 2 mm (ID)					
Mechanical Interface			Fuel Adapter (rubber)					
Diagnostics			Easy Scan (via Heater diagnostics)					
Weight			approx. 0.20 Kg.					

*) The undervoltage limits of the heater must be taken into consideration in the use and design of a battery management system. An installed battery management system may only switch off the heater's power supply below the voltage limits if the response time of 20 seconds ±1 second is taken into consideration.

ATTENTION!
Safety instructions for technical data!
Failure to comply with the ambient conditions stated in the technical data can result in malfunctions.

NOTE
Provided no other values are given, the technical data provided is with the usual tolerances of ±10 % at rated voltage, 20 °C ambient temperature and reference altitude Esslingen.

2 PRODUCT INFORMATION

CUTAWAY VIEW: AX3 4/6 KW HEATER & INTERFACING PARTS

Figure 2.2: L3 cutaway view

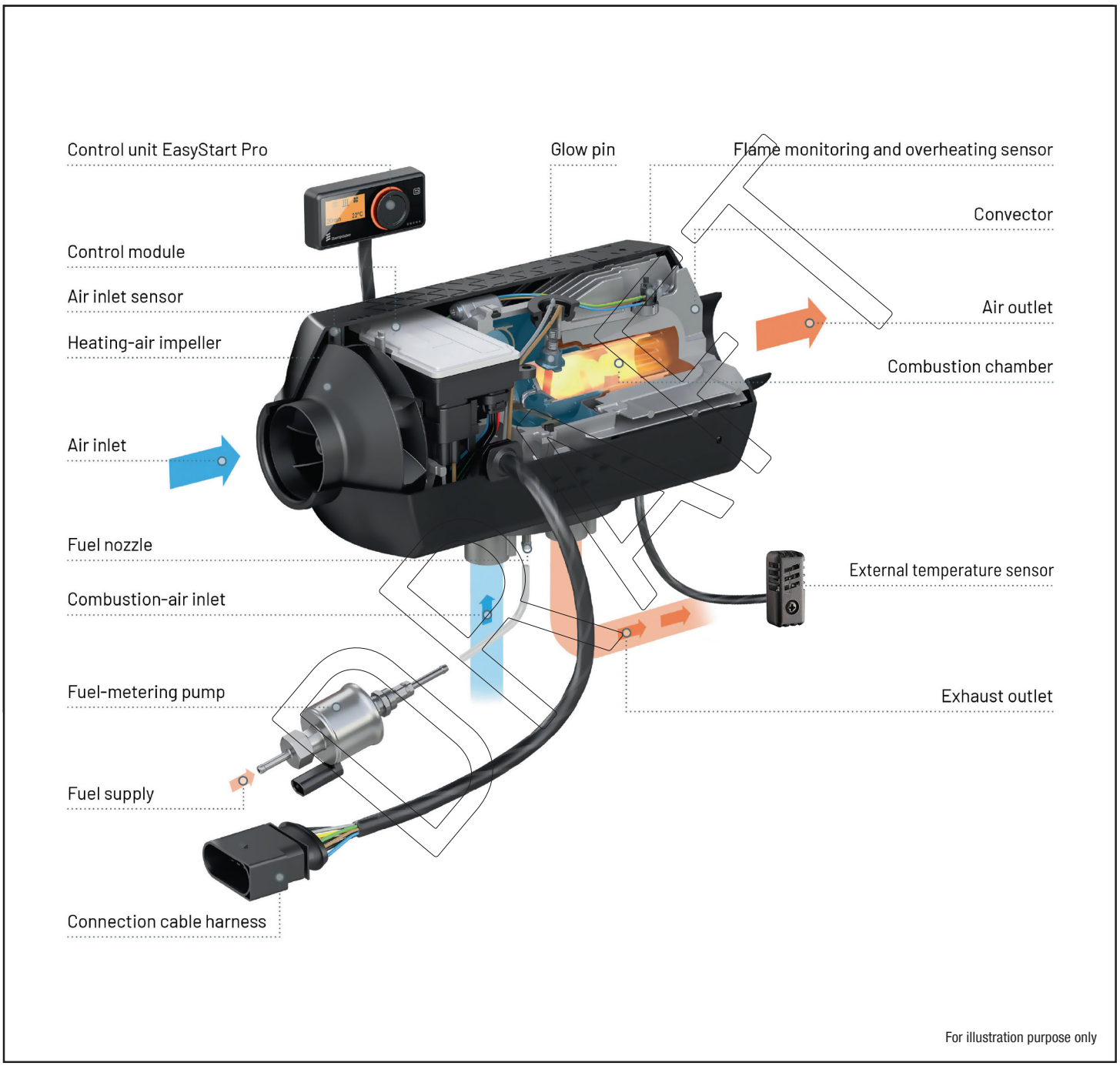

2 PRODUCT INFORMATION

MAIN DIMENSIONS (ECHO 6): Figure 2.3

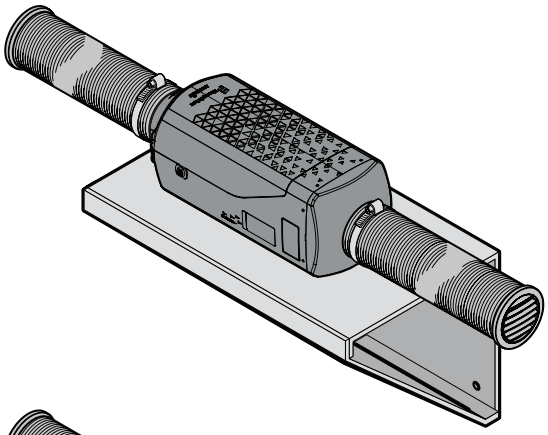

Main dimensions, Airtronic M3

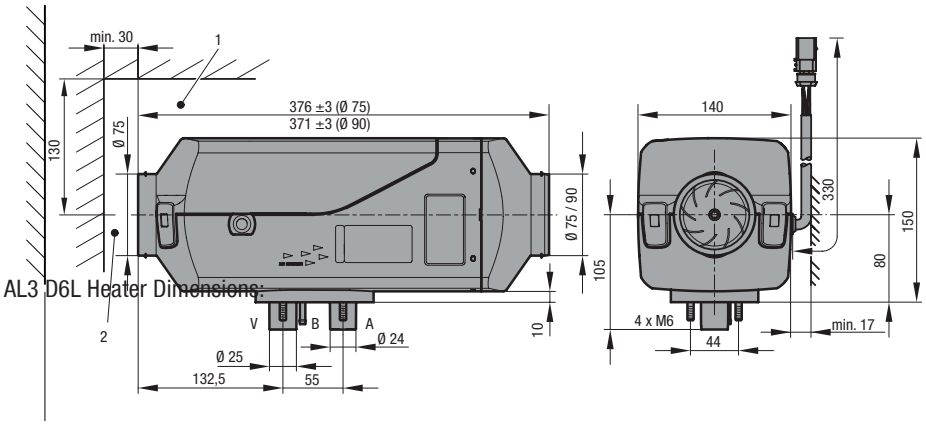

AL3 D6L Heater Dimensions:

Main dimensions, Airtronic L3

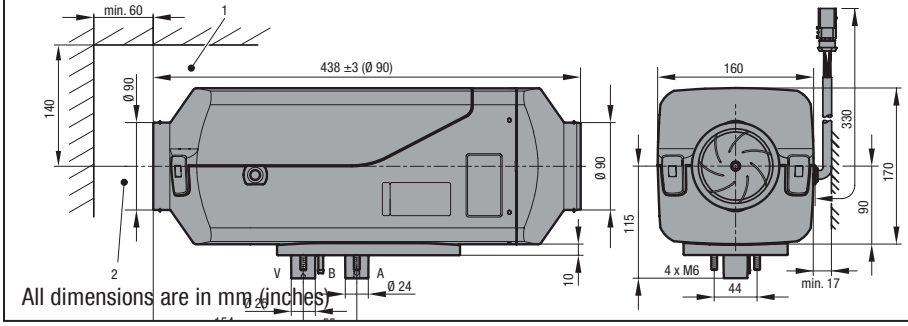

All dimensions are in mm (inches)

- CARGO 6 heating system must not hinder movements of cab and/or trailer when vehicle is in motion.

CAUTION!:

- Ensure minimum of 12 inch clearance surrounding all open sides of the CARGO 6 when it is installed.

* All measurements in millimeters 25.4 mm = 1”

① Clearance between heater inlet and side plate of heater compartment.
② Clearance between ECU cover to the nearby surface. It is meant to carry out inspection or replacements of components that are mounted on the L3 heater

For illustration purpose only

2 PRODUCT INFORMATION

Figure 2.4 AL3 D6L Orientation range

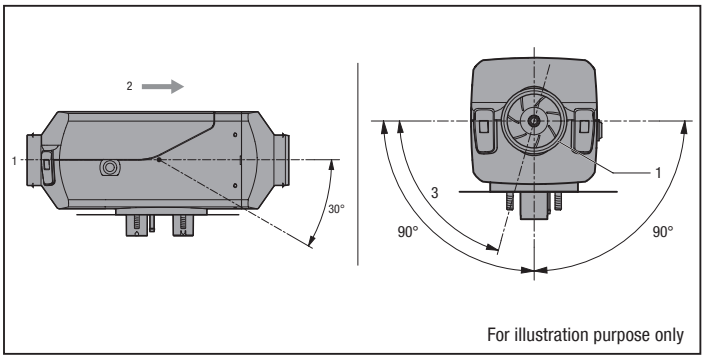

For illustration purpose only

NAMEPLATE

- Eberspaecher heater comes with a nameplate or label (as shown in figure 2.5) for product identification and traceability. Contact Eberspaecher technical support if content on the label is unavailable, unclear, or incorrect. Figure 2.6 describes location where a nameplate is available on D6L heater.
- For CARGO 6 Assembly, the secondary label of the heater is available at a right side plate of the CARGO enclosure as shown in figure 2.7.

Figure 2.5 : Heater Label

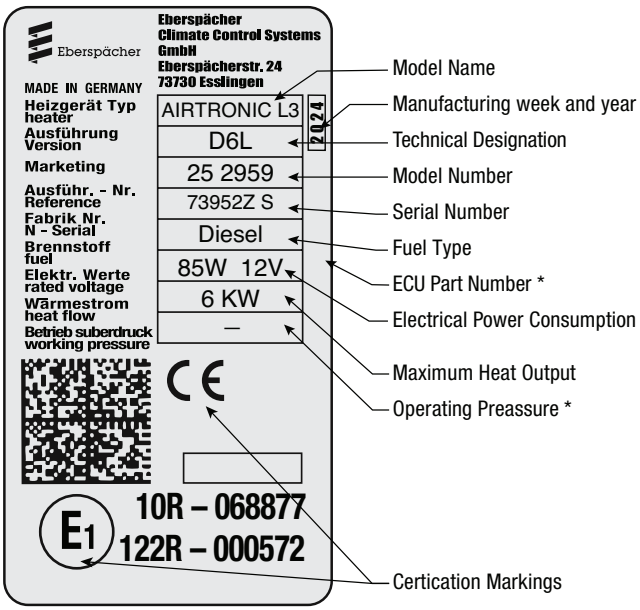

* Depending on the heater type

For illustration purpose only

Figure 2.6 : Heater label location

1 Original nameplate
2 2nd nameplate (duplicate)

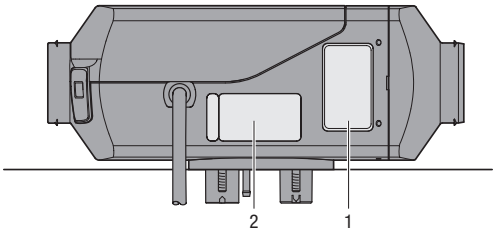

For illustration purpose only

Figure 2.7: CARGO 6 Package Labeling

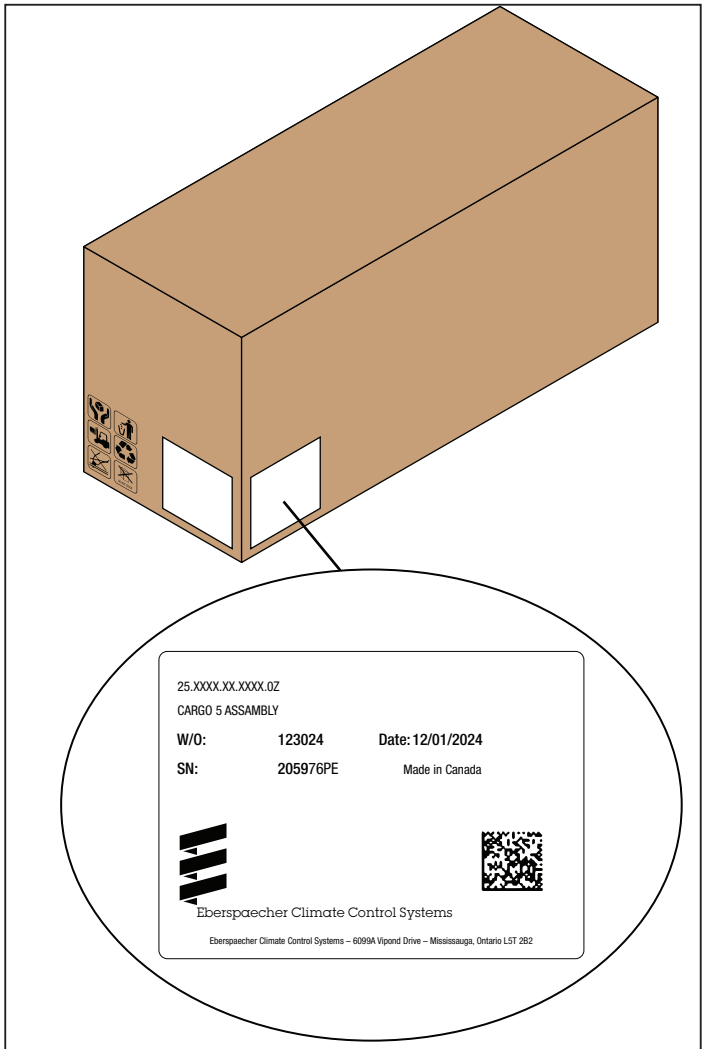

For illustration purpose only

3 INSTALLATION PROCEDURES

INSTALLATION PROCEDURES

This section covers general information regarding preparation, installation and commissioning steps of CARGO 6 Install kit.

PREPARATION:

- Prior to the installation process, it is recommended to ensure proper planning of necessary tools, safety measures and mounting steps.

REQUIRED TOOLS AND EQUIPMENT: Table 3.1

Mechanical tools:	Electrical tools:	Other tools:	Protective Equipment:
Screw driver set plier sets standard/metric wrenches and sockets torque drive set standard drill bit set and hole saws vice grips clamps and clips utility knife hose and fuel line cutters small hammer and light duty filler gauge paper clips pencils and markers measurement cylinder (10 ml) measurement tools wall fishing tool other tools as required	Multimeter thermometer tachometer battery power source (DC) wire cutter wire stripper and crimper terminal remover tool (AMP) electrical grease and tap extra wires aligator clips test lead temporary jumper cable (small) CO Analyser EasySCAN diagnostics	Diesel lock ties and dry rug Lifting equipment Ladder and work table Material handling High temperature insulation foam	Safety shoes safety glasses hand glows ear protection (if required) Any additional protection requirement from company or local standards

NOTE:

- This section outlines the general steps for installation, accompanied by specific details as necessary, which are referenced to particular sections, figures, or tables.
- CARGO 6 system must be installed by an Eberspaecher authorized installer/ /dealer/technician only. Additionally, it is advisable to utilize the EasyScan tool for testing and verifying the CARGO 6 following its assembly.
- Please submit the installation date (date of commissioning) to Eberspaecher to commence the warranty.
- If additional assistance is needed, it is recommended to reach out to Eberspaecher technical support.

NOTE:

SAFETY INSTRUCTIONS

- Ensure that statutory regulations and local codes regarding risk prevention as well as workshop safety standards are followed.
- Ensure additional safety measures, manufacturer's guidelines, and applicable technical manuals are followed during CARGO 6 installation if necessary.
- Improper use of tools or and equipments during installation may lead to personal injuries or product damage.
- CARGO 6 when assembled can be heavy and bulky product, so adequate handling equipment must be utilized to move the assembly. it is essential to ensure that sufficient human and material handling resources are employed throughout the installation process.

OPENING CARGO 6 PACKAGE

1. Unpack the heater assembly and accessory parts from cardboard box.
2. Ensure all parts related to the heater assembly are available. If not, contact authorized dealer or Eberspaecher Climate Control Systems.
3. If any damaged parts are found while unpacking of CARGO 6 assembly, stop installation work and contact authorized dealer or Eberspaecher Climate Control Systems.

NOTE

Packaging materials (i.e. dunnage and cardboard box, etc.) must be discarded as per local garbage and recycle regulations.

DRAFT

DRAFT #1 – Stand: 02.2025 – NCN Design & Illustration: 02/16/2025

3 INSTALLATION PROCEDURES

INSTALLATION

Figure 3.1: CARGO 6 Heating system (Top-frontal view)

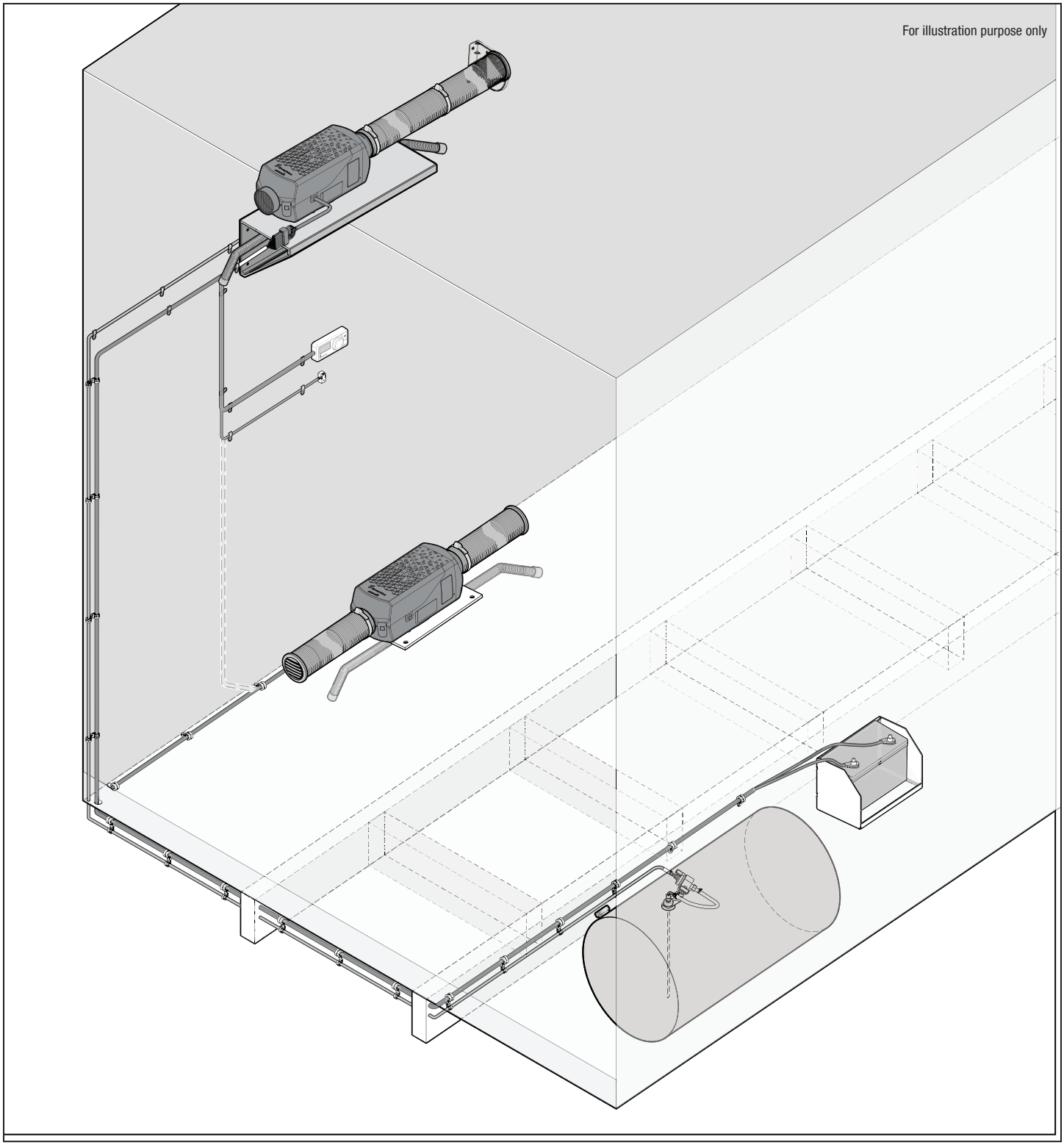

3 INSTALLATION PROCEDURES

MOUNTING PROCEDURE - CARGO 6 HEATER ASSEMBLY

Scope of supply: Airtronic B/D 5 Heater, Mounting bracket (depending on product variant), fasteners, etc.

1) Remove CARGO 5 assembly and hardware parts from package. And, organize them on clean surface or work table.

2) Designate the mounting location of the heater using recommendations mentioned in figure 3.5 and 3.6.

3) Figures 3.2 and 3.3 show footprints of heater bracket and hardware using which mark drilling points at appropriate locations. Ensure hole locations are not against structural cross members or wall studs adjust mounting points of the CARGO bracket (wall mounted) if necessary. Once appropriate location is selected, drill all holes and clean the surface.

4) Attach bracket to the mounting surface as shown in figure 3.2 (use appropriate lifting equipment for wall mounted bracket if necessary).

5) Self tapping screws and other fasteners are provided to attach Cargo brackets (wall or floor mounted) in the trailer. Do not insert any spacer or rubber sleeve between fasteners and bracket.

6) Mount B/D5 heater on the CARGO base and attach electrical connections with the heater harness (do not insert fuse).

7) Apply high temperature silicon caulk to seal minor gaps between joints.

NOTE

- Ensure the mounting location must be selected in accordance with instructions provided in figure.
- Structural material of the trailer wall must be capable of withstanding CARGO load, creep and fatigue. If necessary, additional reinforcements must be placed to support the heater.
- In rare cases, some wall structures without mounting posts made of composite materials like FRB may require additional reinforcements to withstand assembly loads in all conditions (see figure 3.2).
- Installer is responsible of using best practices and following local standards when mounting heater assembly.

Figure 3.2: CARGO 6 Heater Assembly mounting

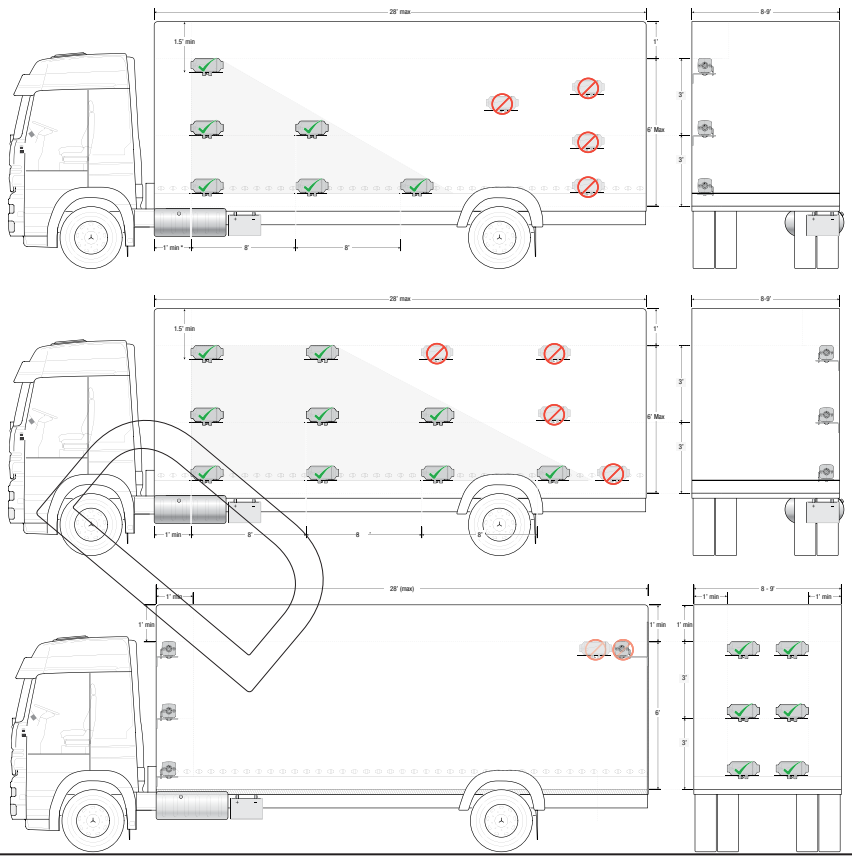

For illustration purpose only

3 INSTALLATION PROCEDURES

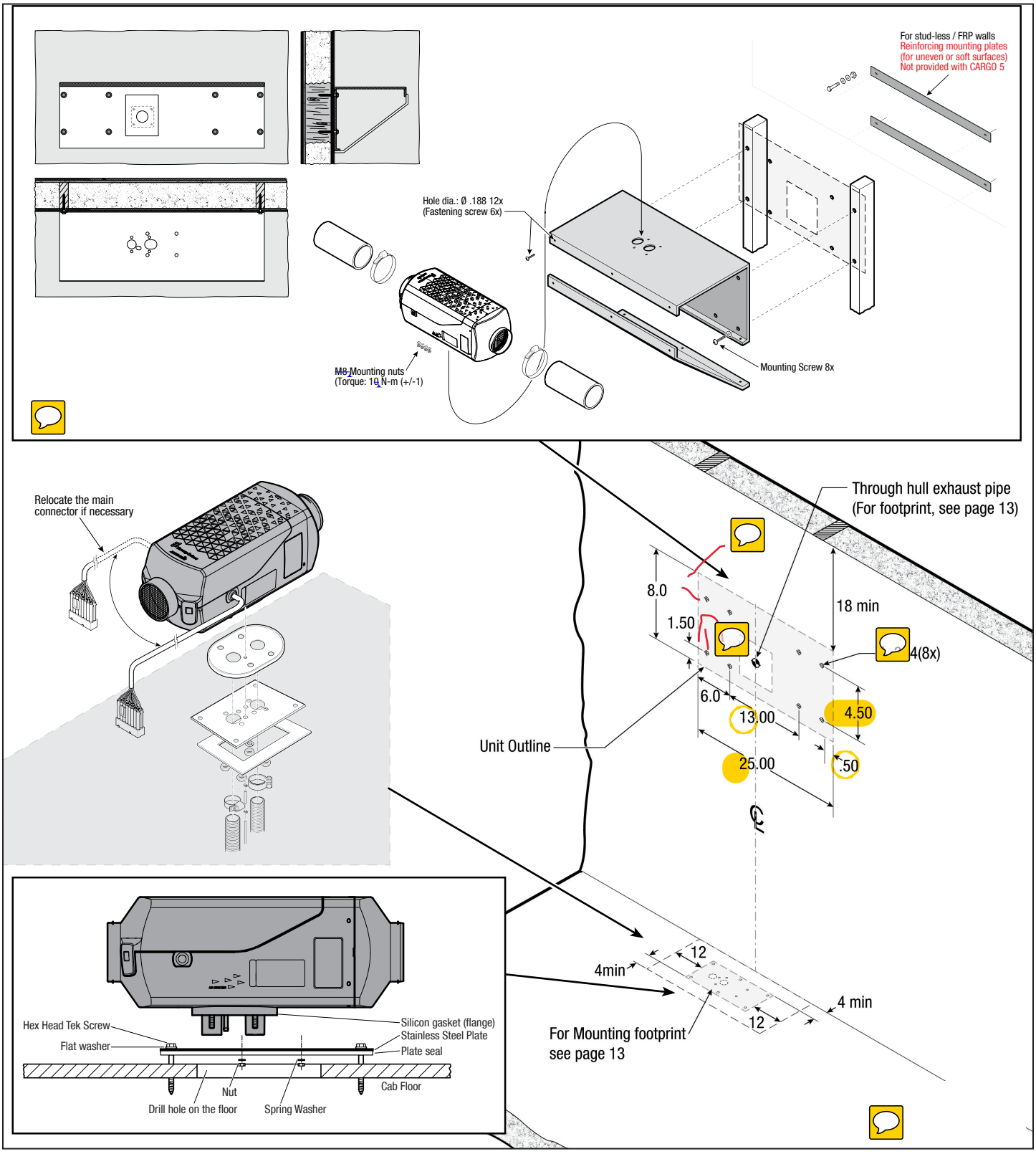

3 INSTALLATION PROCEDURES

Figure 3.4 : MOUNTING FOOTPRINTS

Mounting bracket (Wall mounted CARGO 6)

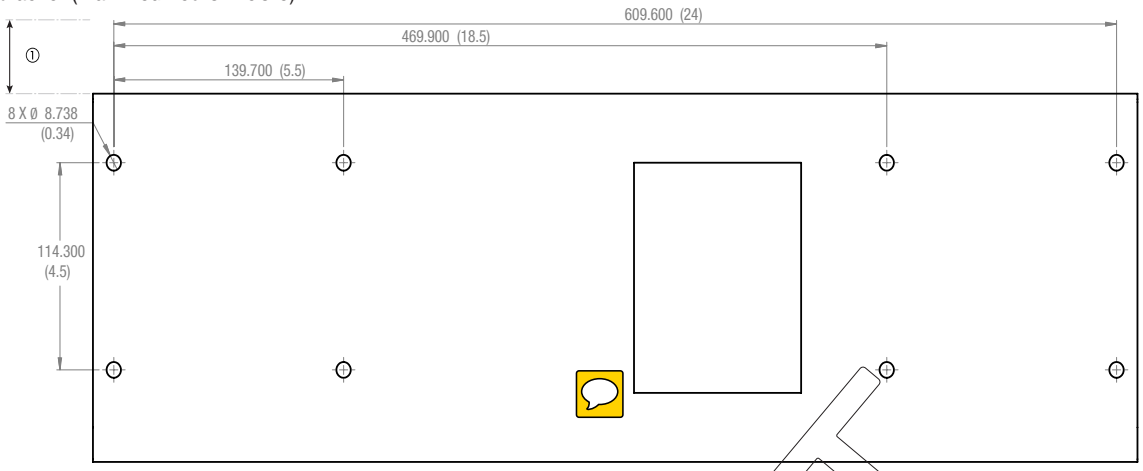

Through hull bracket for exhaust pipe
(Wall mounted CARGO 6)

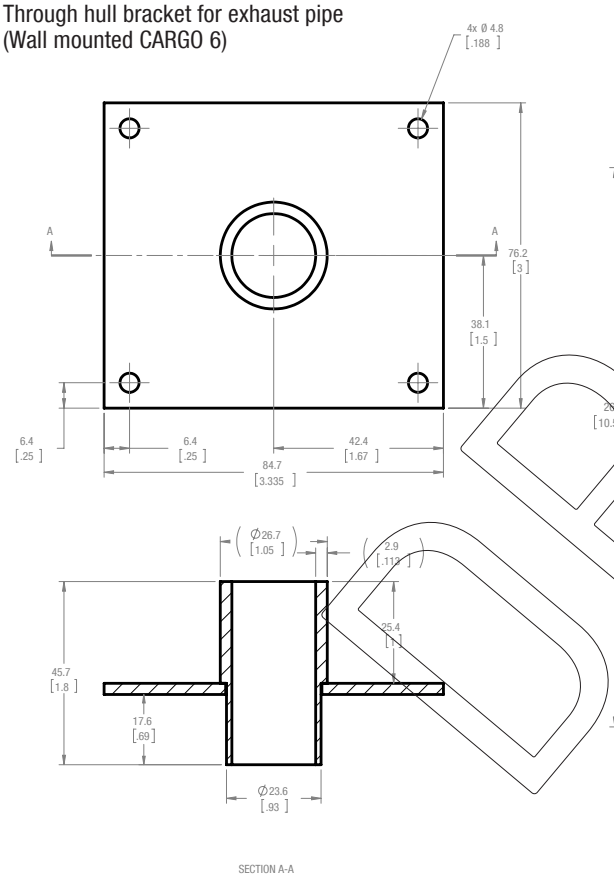

Mounting bracket (Floor mounted CARGO 6)

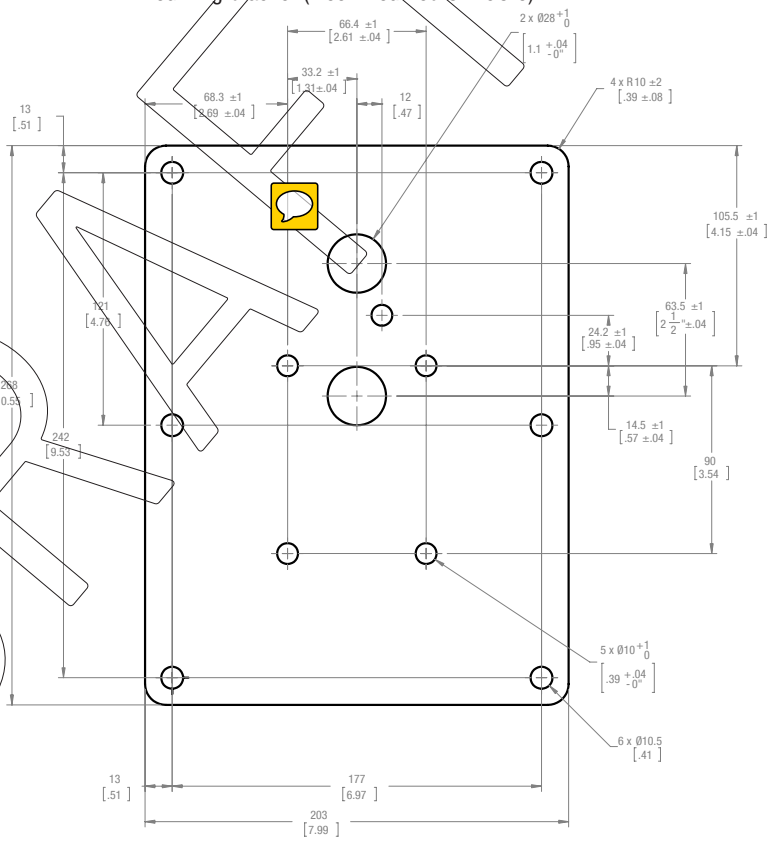

All dimensions are in mm (inches) ①

① Minimum clearance between roof and CARGO 6 bracket (Wall mounted)
Shourld be 1'.

For illustration purpose only

3 INSTALLATION PROCEDURES

Figure 3.5 : CARGO 6 Installation recommendations

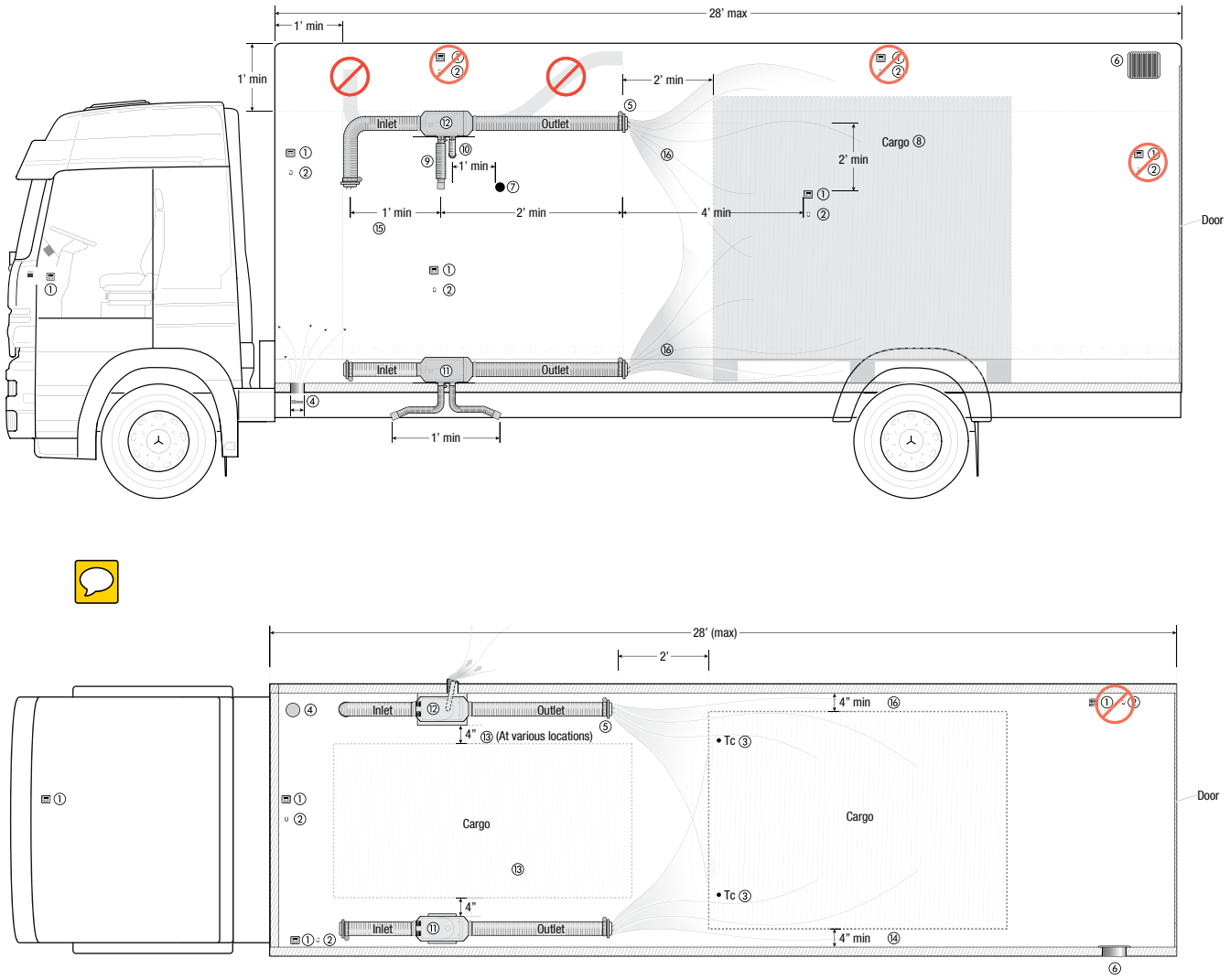

① Digi-Max Controller (Various mounting locations)
② External Temperature sensor (Various mounting locations)
③ Max. cargo temperature < 50°C
④ Ventilation hole for combustion air (wall mounted heater only)
⑤ Hot air outlet
⑥ Exhaust vent (to balance the air pressure inside container)
⑦ CO monitor location (for some applications only)
⑧ Cargo
⑨ Air intake silencer (inside trailer)
⑩ Through hull exhaust (wall mounted CARGO 5 only)
⑪ CARGO 5 assembly (Floor mounted)
⑫ CARGO 5 assembly (Wall mounted)
⑬ Recommended Min. Clearance - Heater to Cargo
⑭ Recommended Min. Clearance for air circulation - Wall to Cargo
⑮ Recommended Min. Clearance - Heater inlet /inlet grill to Heater combustion air intake/silencer
⑯ Recommended Min. Clearance - Heater outlet /outlet grill to Cargo (To avoid cargo temp. beyond 50°C)

For illustration purpose only

3 INSTALLATION PROCEDURES

MOUNTING PROCEDURE – DUCT SYSTEM

1) Scope of Supply: 90mm ID flexible duct , 84-108mm duct clamps duct clamps, 90-100 mm rotatable flanged grills. (For the ease of installation, the CARGO 6 assembly includes duct system attached to the heater, in this case, skip step 3).
2) Determine the necessary heat distribution within compartment; based on which, design a layout of the duct system (refer pages 14-17). In most instances, utilize the standard duct system provided with CARGO 6.
3) Connect two main primary ducts to inlet and outlet of the heater, and trim their open ends to the required lengths (refer to figure 3.4).
4) Secure grills flanges to the ducts using 84-108 mm duct clamps. Attach grills to the grill flanges.
5) Attach the flanged grills to the trailer wall with four self-drilling screws (DIN7981 3.9 x 19 mm) if required.
6) Apply high temperature silicon caulk to seal minor gaps between joints.
7) Place Large decal warning hot air outlet below the outlet grills. (Figure 3.9)

Figure 3.6 : CARGO 6 Duct installation

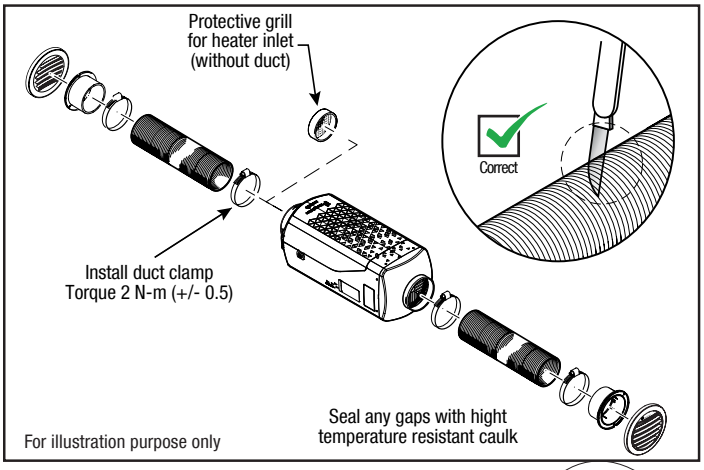

FRESH AIR DUCT SYSTEM - OPTIONS:

– With inlet side duct: In this arrangement, the inlet side duct is routed from outside via through hole and connects with the heater.
– Without inlet side duct: In this case, the protective safety screen should be affixed directly to the heater inlet.

NOTE

– For fresh air duct systems, drill only one 4" hole exclusively for the outlet side duct.

EXTENDED DUCT SYSTEM - OPTIONS:

– Refer to the information provided on pages 14-17 for guidance on extending the duct system.

NOTE

- Verify the design of duct system based their total component rating against the heater rating. Under no condition, the component rating is allowed to exceed heater rating. (please see chart and table on page 17).
- Normally, the heater is connected with a single branched open duct system. In multi branched duct network, note that at least one major branch must remain open at all time. Examples single and multi branch duct system is shown in figure 3.6.
- Ensure minimum 1 feet of single branch duct at the heater inlet and outlet before turning it into multi branch duct system.
- Round duct can be converted to square duct using simple conversion as described in figure on page 14 (Any modification must be approved by Eberspaecher authorized dealer or technical support).
- Duct network must not interfere with cargo location and material handling activity within trailer. If require, cover ducts with sheet metal panel to ensure safety of the system (Any modification must be approved by Eberspaecher authorized dealer or technical support).
- Inlet and outlet ducts must be separated at sufficient distance so the overall air can be circulated throughout the trailer .
- In fresh air system, the compartment must have sufficient size of an exhaust vent to prevent ballooning effect. Ineffective venting can also lead to fluctuations in pressure within the container, potentially compromising its structural integrity.
- Avoid large restrictions, sharp bends and abrupt reduction in duct diameters. Refer figure 3.5 showing estimated values between direction of flow and distribution ratio in Y connector.
- Modifications to the duct system of the CARGO 6 assembly necessitate validation from Eberspaecher technical support before installation can proceed. A functional test may be required to ensure the system's resilience to overheating.

CAUTION!

- Care must be taken to ensure sufficient clearance between hot air outlet and cargo, so the lading air may not reach beyond storage temperature limits of the cargo. Eberspaecher Climate Control Systems recommends not to exceed lading air temperature beyond 50 °C when coming in touch with any part of the cargo.
- Any restrictions within return air or hot air ducts are not allowed (routine system check is needed to ensure safety of the heating system).
- Hot air temperature in outlet ducts may reach up to 90 °C during normal operation and 150 °C during overheat conditions; therefore, extreme care must be taken not to place any parts of body or heat sensitive material in front of the hot air jet from the heater.
- During normal operation of the heater, temperature difference between inlet and outlet of the duct must be less than 100 °C (For temperature read outs, place probes about 30 cm away from the inlet and outlet ports of the heater).
- In general conditions, the inlet air temperature should not reach beyond 40 °C at any given operating conditions of the heater. If so, relocate ducts or cargo to ensure sufficient air circulation within compartment. In some cases, hot air from the heater may require a mechanical means (blower fan and flap) to blend or supplement airflow. Additional verification and approval from Eberspecher authorized dealer or technical support is necessary.
- Trailer containing explosive, dusty, reactive material or dry grains do create hazardous environment; therefore additional measures (i.e ventilation system, fire prevention system, fresh air blending, temperature monitoring system, emergency shut down mechanism) are needed to maintain overall safety of the system.
- Heater must never be set to operate beyond the application requirement; such circumstances may affect heater performance that could lead to frequent overheating or short cycling conditions.
- Hot and Humid air in cargo compartment is the major cause of mold and bad odor. In such cases, additional dehumidification measures i.e. fresh air exchange are required.
- Ensure adequate ACH (via mechanical ventilation and fresh air blending system) is maintained when utilizing the CARGO 6 for heating containers intended for livestock transport.

3 INSTALLATION PROCEDURES

Figure 3.7 : Flow distribution ratio within y connector

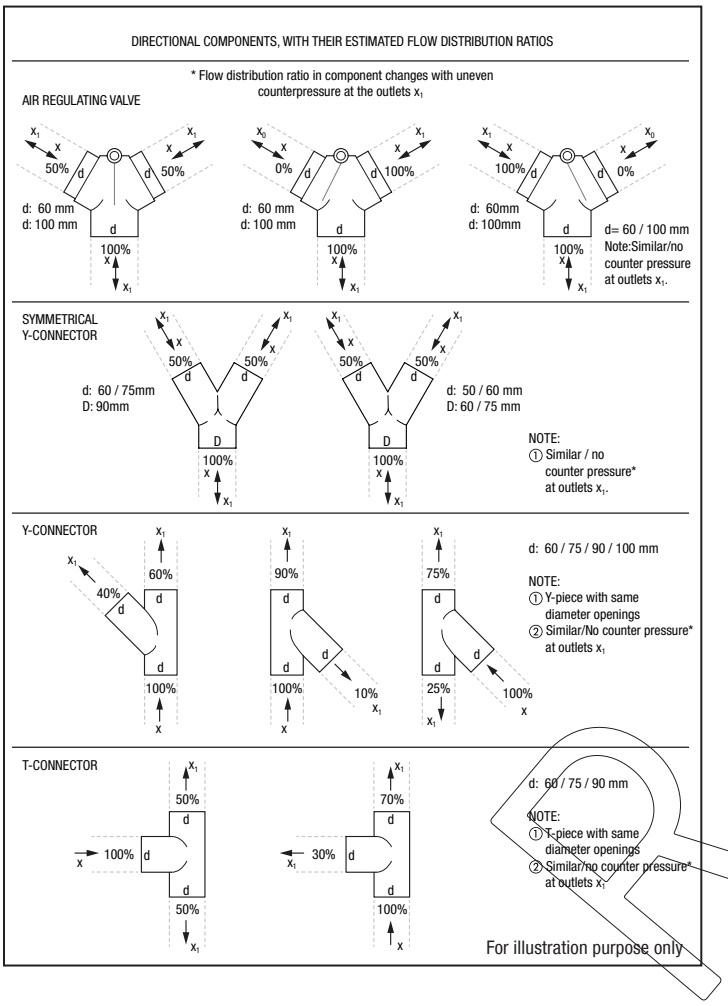

SELECTION OF DUCT CROSS-SECTION (SQUARE) FOR AX3 D6L HEATER WITH OUTFLOW 90 MM (Table 3.2)

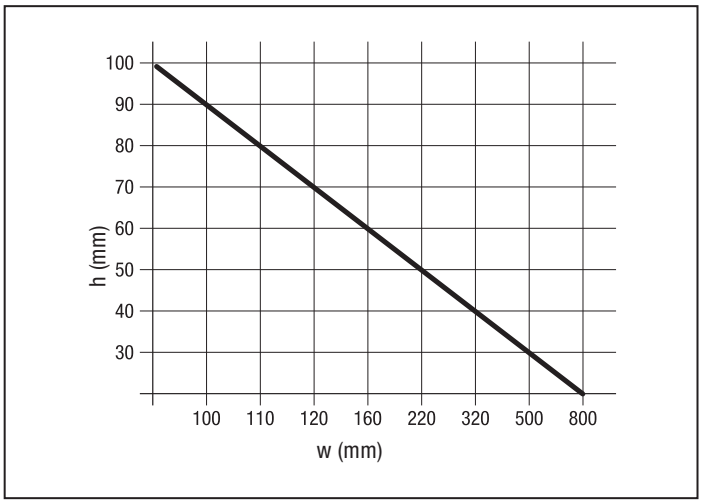

SQUARE DUCT SIZE

In some cases, installation of round flexible ducts may be converted into to square/rectangular hard ducts. However, due to higher airflow resistance in square/rectangular ducts, appropriate dimensions must be selected using table 3.2.

NOTE

Below table shows dimensions for square/rectangular duct size equivalent to 90 mm round duct. Do not use it for 100 mm duct branch.

NOTE

Any modification in duct system will require further evaluation and approval from Eberspaecher authorized dealer or technical support team.

Figure 3.8 : Duct channel types

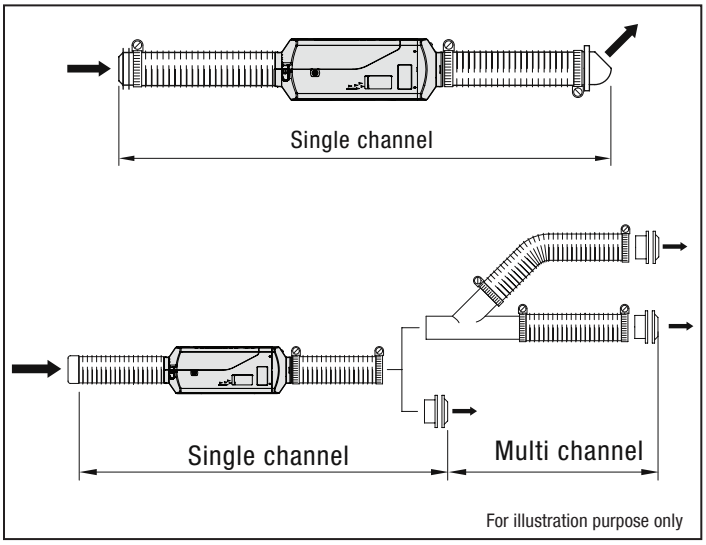

Figure 3.9 : Spare/ Rectangular duct

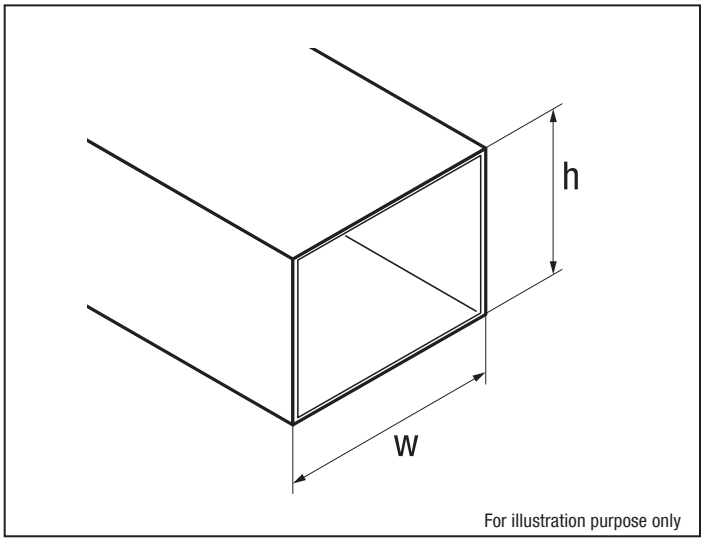

DRAFT #1 – Stand: 02.2025 – NCN Design & Illustration: 02/16/2025

3 INSTALLATION PROCEDURES

Figure 3.10: Duct system Layout (CARGO 5 Wall mounted)

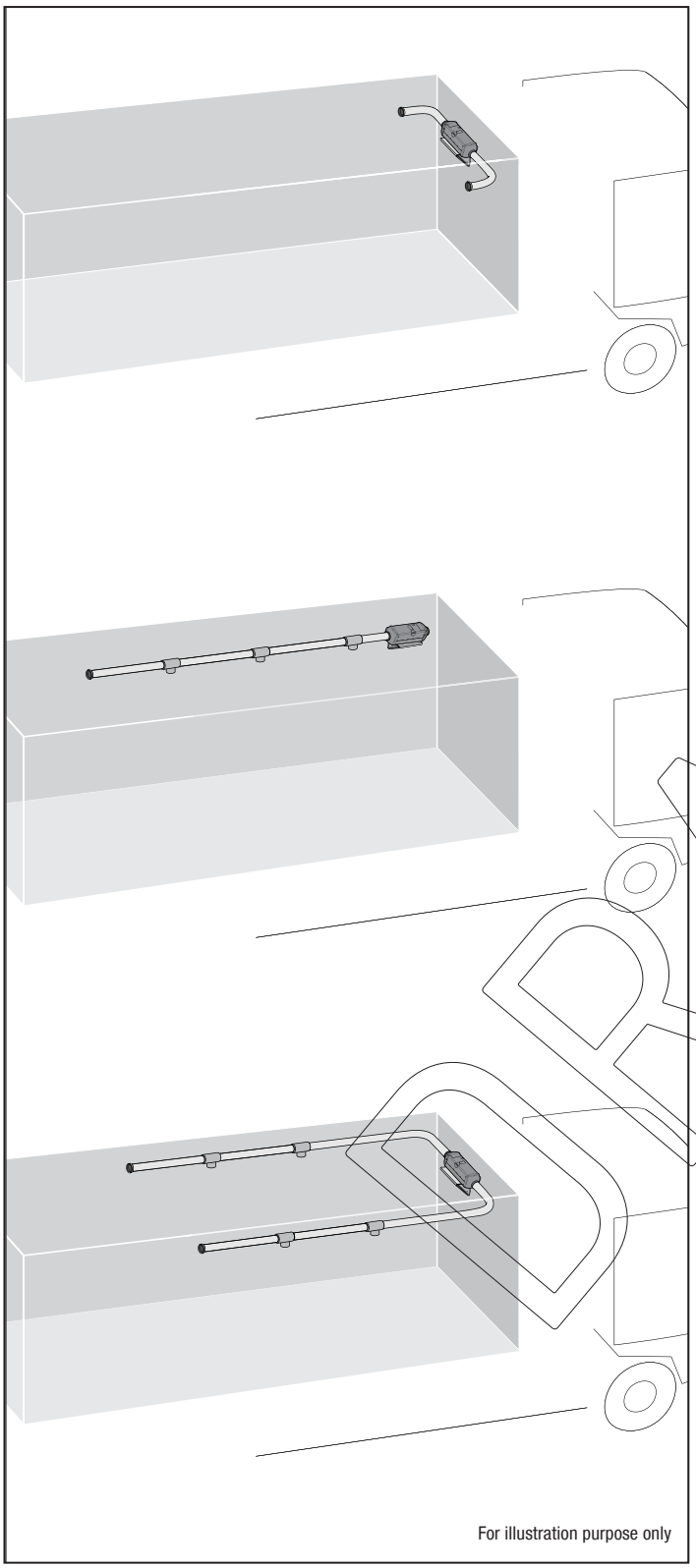

Figure 3.11: Duct system Layout (CARGO 5 Floor mounted)

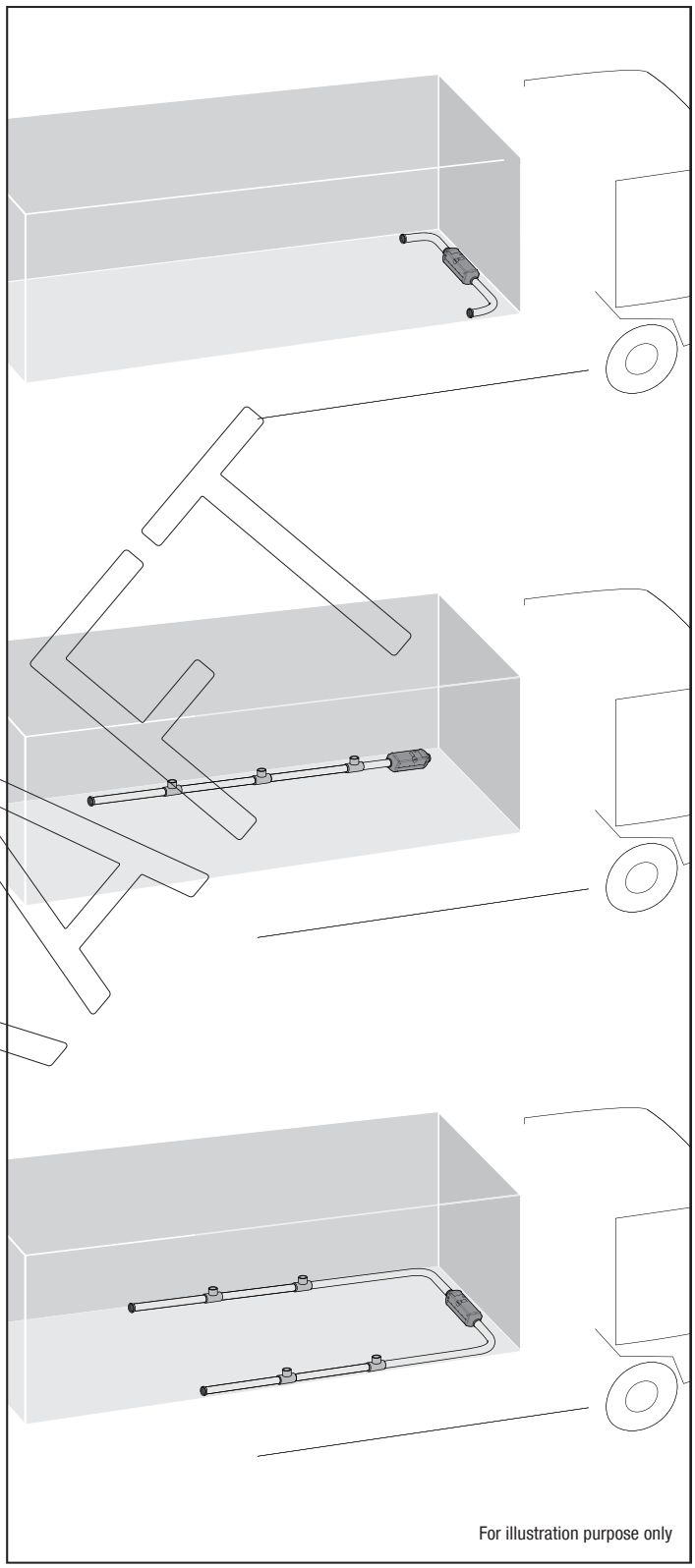

DRAFT

3 INSTALLATION PROCEDURES

DUCT SYSTEM RATING – AIRTRONIC AL3 D6L

Heater Rating 10

NOTE

To protect heater from overheat, the sum total of all component ratings (see page # 17) within the duct system must not be higher than heater rating.

NOTE

Refer page 13-15 for information related to duct system.

Figure 3.12 Duct system Rating

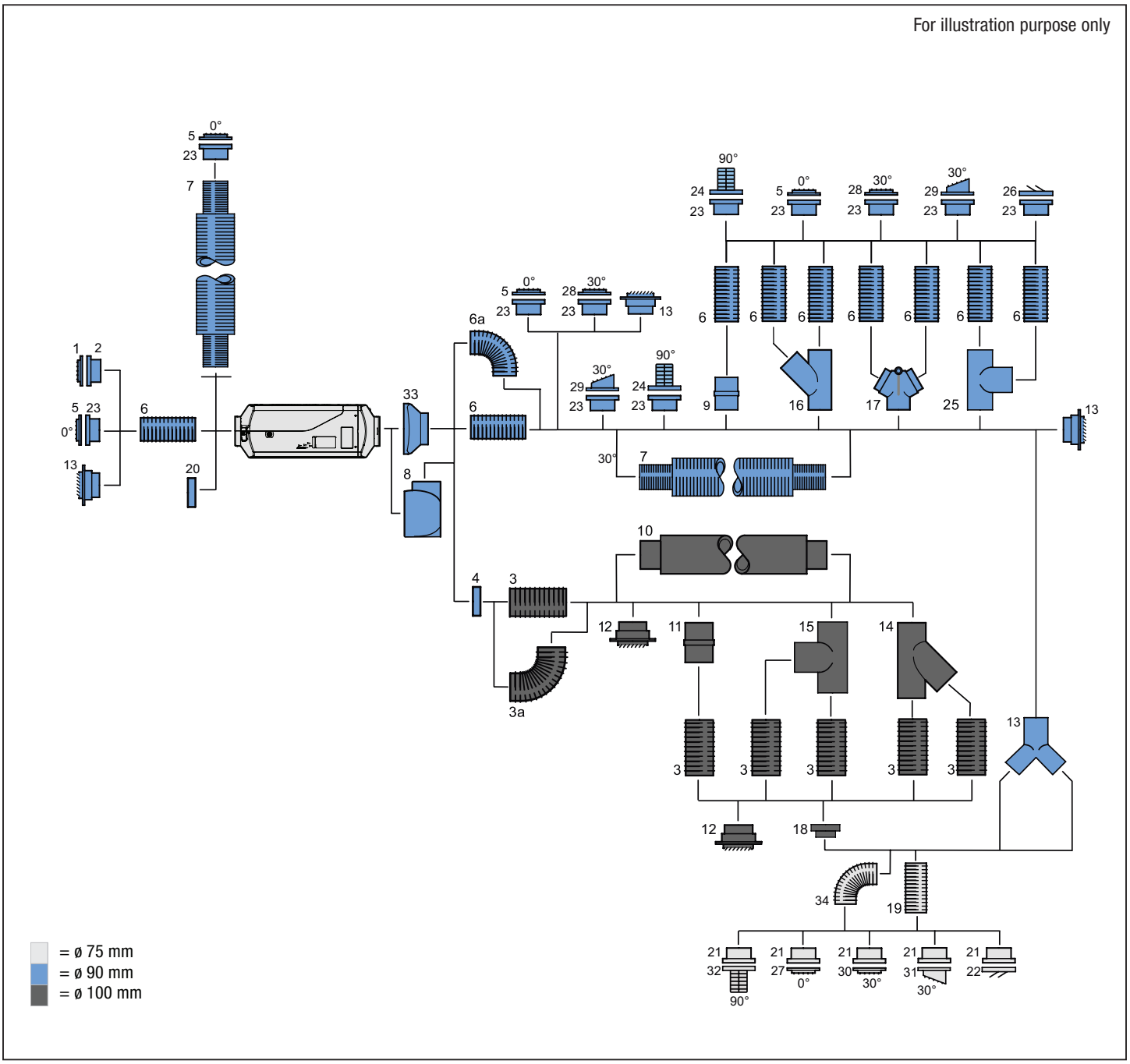

DRAFT #1 – Stand: 02.2025 – NCN Design & Illustration: 02/16/2025

3 INSTALLATION PROCEDURES

AIRTRONIC AX3 D6L (DUCT / COMPONENT RATING) (Table 3.2)

No.	Name (Dimensions in mm)	Component rating Single branch duct	Component rating Multi branch duct	Pasts List # (Pages 61 - 63)
	Heating-air duct with Ø 90 scoop (heater guide number 10)			
1	Protective grille 90/100 mm dia, metal	0.6	0.2	4.1
2	Connecting socket, metal, 90/100 mm dia.	0	0	2
3	Flexible pipe, 100 dia. per m	0.6	0.2	3.1b
3a	Bend, 90° of flexible pipe, 100 dia.	0.6	-	1b
4	Adapter, 90x100 dia.*	0	-	4
5	Flat air outlet 0* , 90 mm dia.	1	0.2	2a
6	Flexible pipe, 90 dia. per m	1.0	0.25	3b
6a	Bend, 90° of flexible pipe, 90 dia.	0.2	3	-
7	Intake Silencer, 90 dia.	0.8	-	-
8	Spherical reduction hood, 90 dia.	8	-	-
9	Connector, 90 dia straight union.	0.5	0.1	-
10	Silencer, 100 dia.	0.5	-	-
11	Connector, 100 dia straight union.	0.4	0.1	-
12	Rotatable Flanged Grill, 100 dia.	2	0.5	16
13	Rotatable flanged grill. 90 dia.	2	0.5	16
14	Y-piece 100x100x100 dia.	-	0.5	9c
15	T-piece 100x100x100 dia.	-	0.5	-
16	Y-piece 90x90x90 dia.	-	0.6	9b
17	Regulating Valve 90x90x90 dia., (Position - Middle)	-	1.1	10
17a	Regulating Valve 90x90x90 dia., (Position - Left/right)	1	-	10
18	Reduction piece, 100 dia. - 75 dia.	3.2	-	18.1b
19	Flexible pipe, 75 dia. per m.	4	1	3b
19a	Bend, 90°- of flexible pipe, 75 dia.	1	0.25	-
20	Outlet grill (rotatable) 75 dia.	-	1.25	-
21	Flanged Connector, 75 dia	0	0	12a
22	Round outlet, 75 dia., closable	-	-	14/14.1
23	Flanged Connector, 90 d.	0	0	12b
24	Upright outlet grill, 90*, 90 dia.	3	0.8	14/14.1
25	T-junction Ø 90/90/90	– 0.6 35		
26	Closable air outlet with fitting Ø 90	–	–	12
27	Flat air outlet 0° with fitting Ø 75	2.5	0.7	13
28	Flat air outlet 30° with fitting Ø 90	1.7	0.4	11
29	Upright air outlet 30° with fitting Ø 90	2.3	0.6	10
30	Flat air outlet 30° with fitting Ø 75 2.7	0.8	11	
31	Upright air outlet 30° with fitting Ø 75	2.1	0.5	10
32	Upright air outlet 90° with fitting Ø 75	4.7	1.2	14
33	Outlet hood Ø 90	0	0	–
34	90° elbow of flex. pipe Ø 75	1	0.25	1

3 INSTALLATION PROCEDURES

MOUNTING PROCEDURE – FMP SYSTEM

1) Scope of Supply: FMP holder, self-tapping screws, 2mm ID plastic fuel line, 3.5 - 4.5 mm rubber adapter, 3.5 ID x 50mm rubber hose, 3.5-5 mm rubber adapter, 9.5 mm fuel clamps, 11.5 fuel clamps, 3/8 & 5/8" C clip clamps, convoluted wrap, 2 mm x 26" universal fuel pick up, etc.

2) Identify mounting locations of FMP components as well as select routing layout of the fuel line. (Refer to figures 3.16 for the dimensions of the AL3 D6L FMP system).

3) Prior to routing the fuel line, start with installing the large components (such as the FMP) at designated locations. For details on the fuel pick-up assem bly and FMP installation procedure, please refer to figures 3.14, 3.16 and 3.19.

4) Install the fuel line and make connections to the interfacing components using rubber adapters as shown in figure 3.1, 3.14, 3.15 and 3.16.

5) Refer image 3.14 information related to for information related to routing fuel line, interfacing fasteners and clipping points. Apply sufficient slack while clipping the fuel lines to allow parts movements in dynamic conditions.

6) Cover fuel lines with convoluted wrap and apply electrical tape at sufficient distance.

NOTE

- Use 1.5mm ID fuel line at pressure side of the FMP for CARGO 6 install kits with gasoline heaters. Refer heater specific technical document for applicable fuel line ID.
- Protect the FMP from heating up more than allowed, do not install near to the exhaust silencer or pipes. Refer technical data on page 5 for temperature range of the FMP in different condition.
- The fuel output of FMP may vary depending on the operational altitude; however, avoid running the heater at altitude higher than 5000 meters.
- Apply butt joint on the fuel lines connections using an appropriate fuel adapter/hose and clamps.
- Fuel line must be free of excessive restrictions, sharp bends, tension, or kinks as shown in figure 3.14 below.
- Fuel line between pick up tube to FMP requires smaller distance (< 6 inches) between clipping points to prevent accidental fuel leakages from the tank via siphoning. (Refer sample image 3.14 below showing normal fuel line installation).
- Fuel line must be kept away from electrical or heating sources. Also, avoid routing fuel line over electrical wires or heating sources.
- Fuel line must be primed during commissioning of the heating system.
- Air bubbles (>1 cm) can cause heater to abruptly shut down during operation; it must be investigated carefully to find the source of air penetration in the system.

Figure 3.13: Fuel system (Routing and connections)

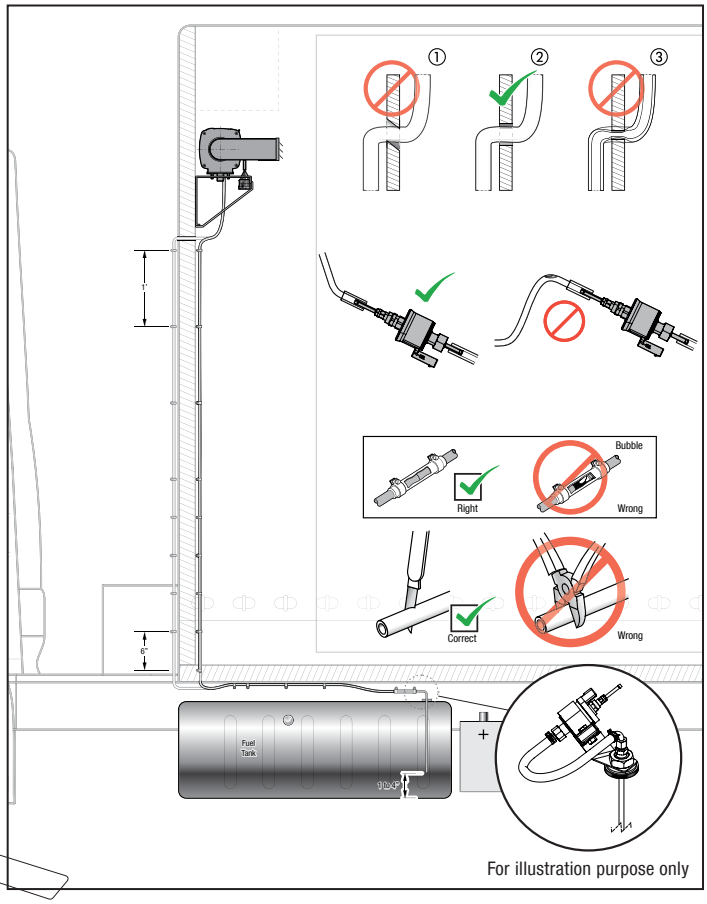

Figure 3.14: Fuel line interfacing with CARGO 6

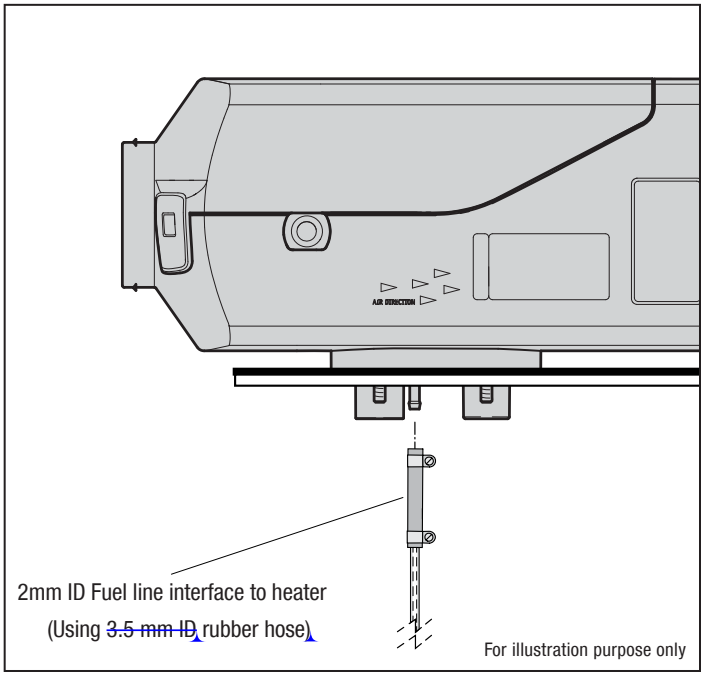

3 INSTALLATION PROCEDURES

Figure 3.15: FUEL SYSTEM DIMENSIONS

POSSIBLE SUCTION AND PRESSURE HEIGHT OF THE DOSING PUMP

- Pressure height from vehicle tank to dosing pump: (a = max 2.5m or 98")
- Intake height in pressure-less vehicle tank: (b = max 1M or 40")
- Intake height in vehicle tanks with withdrawal by negative pressure (valve with 0.03 bar in tank cap): (b = max 0.4M or 15.75")
- Pressure height of the dosing pump to the heater: (C = max 2M or 79")

NOTE

- Proper mounting angle of the fuel pump is necessary to allow any air or vapor in the fuel lines to pass through the pump rather than cause a blockage.
- It is recommended to use vented tanks (In case of pressurized fuel tank, contact Eberspaecher technical support)

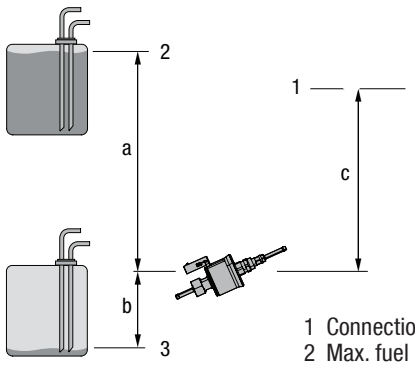

1 Connection to heater
2 Max. fuel level
3 Min. fuel level

DIMENSIONS – FUEL SUPPLY

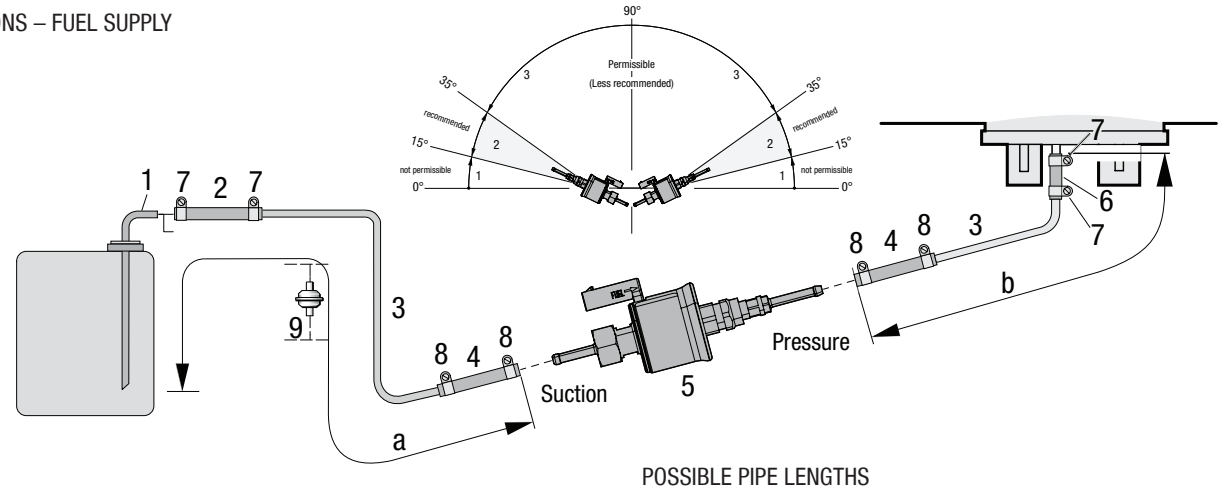

1) Fuel pick up tube 2mm x 26" 1/4 NPT
2) Fuel adapter 3.5 - 5 mm (ID) - for pick up tube
3) Plastic fuel line 2 mm (ID)
4) Fuel hose 3.5 mm (ID) x 50 mm
5) Fuel metering pump (22 4550 05 0000)
6) Fuel adapter 3.5 - 4.5 mm (ID) - for heater
7) 11 mm clamp
8) 9 mm clamp
9) Fuel strainer

POSSIBLE PIPE LENGTHS

Intake side	Pressure side
a = max. 2 m (79")	b = max. 6 m (236")

NOTE

- CARGO 6 scope of supply for fuel system includes: 3.5-5mm ID fuel adapters, 3.5 mm ID hose and 2mm fuel lines for suction or pressure side of FMP.
  Fuel line clamps: Tightening torque 0.75 N-m (+/- 0.25).

For illustration purpose only

FUEL QUALITY

- CARGO 6 assembly includes AX3 D6L heater that requires diesel (DIN EN 590) as a fuel source.
- Usage of FAME 30% Bio diesel (FAME, DIN EN 14214) may be allowed; however, frequent services may be required. In case of storage periods longer than 30 days, it is advisable to use FAME free products to reduce adverse impacts on fuel flow properties and filter ability.
- Replace summer and winter diesel (Type I and II) depending on the weather conditions. Use arctic or polar diesel when ambient temperature below -20°C up to -40°C.
- Certain fuel additives can influence the combustion process of the heater, potentially resulting in the need for premature maintenance.
- Usage of Kerosene as a fuel is only allowed for the post maintenance run up for max 30 min operation.
- The flow characteristics of certain fuels, such as Summer Diesel, E85, or FAME biodiesel, are significantly influenced by sub-zero temperatures (°C). As a result, the operation of heaters may be disrupted.
- In case of gasoline heater, usage of fuel in accordance with DIN EN 51600 / DIN EN 228 is allowed.

3 INSTALLATION PROCEDURES

MOUNTING PROCEDURE - FUEL PICK-UP

UNIVERSAL PICK-UP TUBE (2 mm ID x 26" 1/4 NPT)

1) Select pick up tube location nearer to the mounting location of FMP.
2) Mark drilling point as per dimensions shown in mounting footprint. Drill holes and clean surface area ensuring there are no metal pieces in the tank.
3) Tighten ferrule nut to pick up at desired height. Cut the pick up tube length according to the tank depth. Allow 1- 4" of clearance from bottom of the tank depending on tank geometry and application requirement.
4) Insert pick up tube with holding tabs and reinforcing washer in the tank. Lift the assembly to the position and tighten it with fasteners: washer, grommet and nut.

NOTE

- Ensure tank is made of standard gauge sheet-metal. Add a spare fuel sender gauge plate if necessary.
- Do not over tighten the ferrule nut. It will create irreversible damage to the pick up tube.
- Do not bend fuel pick up tube.

CAUTION!:

- To prevent risk of fire or explosion, it is necessary to fill tank with an inert gas whenever carrying out drilling on the tank.

Figure 3.17: Warning label (Fuel type)

USE DIESEL FUEL ONLY!

Figure 3.16: Mounting footprint for Fuel pick up tube.

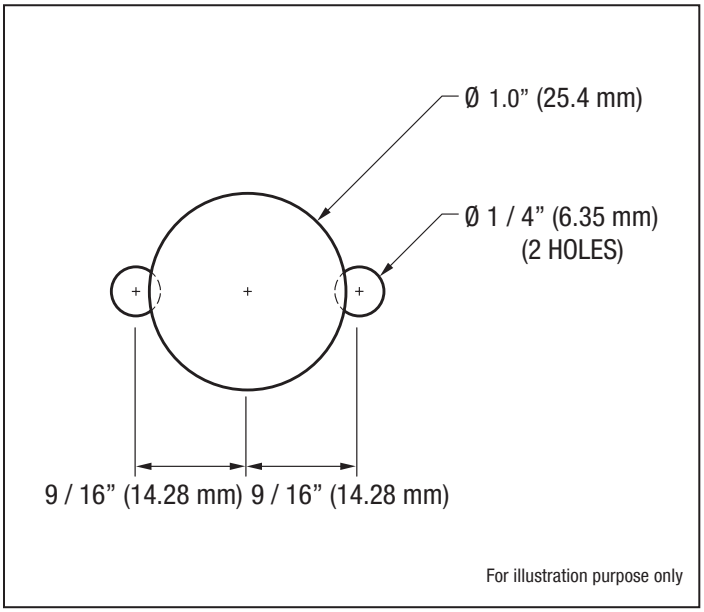

NOTE

Drill the two (1/4") holes first.

Fighre 3.17: Fuel pick up tube (with internal parts)

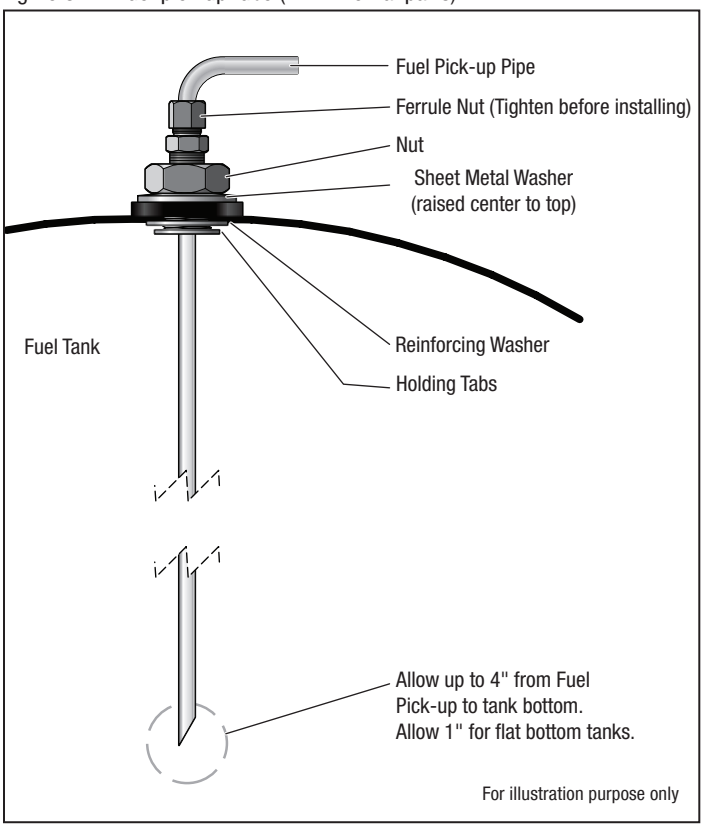

Figure 3.18: Fuel pick up tube

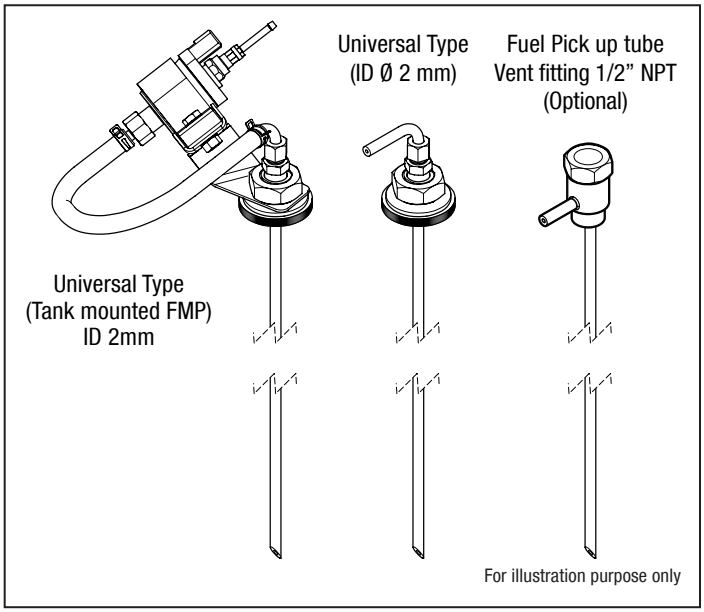

NOTE

CARGO 6 comes with Universal type pick-up tube.

3 INSTALLATION PROCEDURES

MOUNTING PROCEDURE - INTAKE & EXHAUST PIPE SYSTEM

INTAKE SYSTEM

1) Scope of supply: Ø 25mm air intake tube, plastic end cap, 20-32 mm clamp, zip tie, plastic elbow (optional).
2) Attach air intake tube to the intake port using hose clip/clamp as shown in figure 3.21.
3) For wall mounted heater, route combustion air intake tube downwards or under the bracket similar to the figures 3.19.
4) For floor mounted heater, route the combustion air intake tube using instructions provided in figure 3.5 and 3.21.
5) If necessary, route the fuel line along side of the intake tube with attachments at suitable locations to prevent touching or rubbing to exhaust or metal parts (see figure 3.22).

NOTE

- Drill 1" hole at suitable location to ensure sufficient ventilated air in the compartment for the heater, see figure 3.4)

WARNING:

- Intake and compartment air must not be contaminated by fuel vapor, exhaust fumes, etc.

EXHAUST SYSTEM

1) Scope of supply: 24 x 750 mm exhaust pipe, metal end cap, 26-28mm exhaust clamp, fasteners and nuts, double angle bracket, 28 mm c-clamp, exhaust silicone grommet.
2) Make sure the flexible exhaust pipe is attached with 26-28 mm exhaust clamp to the exhaust port heate. For wall mounted CARGO 6 assembly, guide the open end of the exhaust pipe to 1" hole at the wall where it attaches to a through hull fitting using 26-28 mm exhaust clamp as shown in figure 3.19. (Refer figure 3.4 for through hull fitting mounting footprint). For floor mounted heater, the open end of the exhaust pipe is routed as per figure 3.19, 3.20 and 3.21).
3) Apply clipping of exhaust pipe using 28 mm c-clamps to the vheicle/ cargo trailer as 3.21 if applicable.
4) Cover exhaust pipe with insulation sleeve as shown in below figure 3.22.
5) Apply sealant or cement (high temperature resistant) to seal any gaps at interface between heater and exhaust pipe if necessary.
6) Locate appreciate warning signs nearby the exhaust pipe describing hot part.

NOTE

- Options to alter combustion air intake or exhaust pipes are not allowed, unless otherwise approved by Eberspaecher technical support (Functional tests may be required for combustion system verification).
- The fuel pipe and the combustion air intake must be be securely attached to the enclosure base in order to ensure they never come into contact with the exhaust pipe return air duct.

CAUTION:

- Exhaust pipe surface can reach very high temperature (>150°C), so extreme care must be taken when working with exhaust system during or after heater operation.
- Flue gases from exhaust pipe must not penetrate back in to heater compartment by any means.

DANGER:

- Exhaust from heater operation is highly toxic to human; prolonged exposure to Carbone monoxide may lead to respiratory issues or death due to asphyxiation.
- Heat from exhaust gases may trigger fire hazard or explosion if the heater operation is allowed in vicinity of explosive or flammable material.
- Material of exhaust insulation sleeve can produce particulates that may affect lungs if inhaled without PPE. Extreme care is required when working with it.

Figure 3.19: CARGO 6 Intake and exhaust system

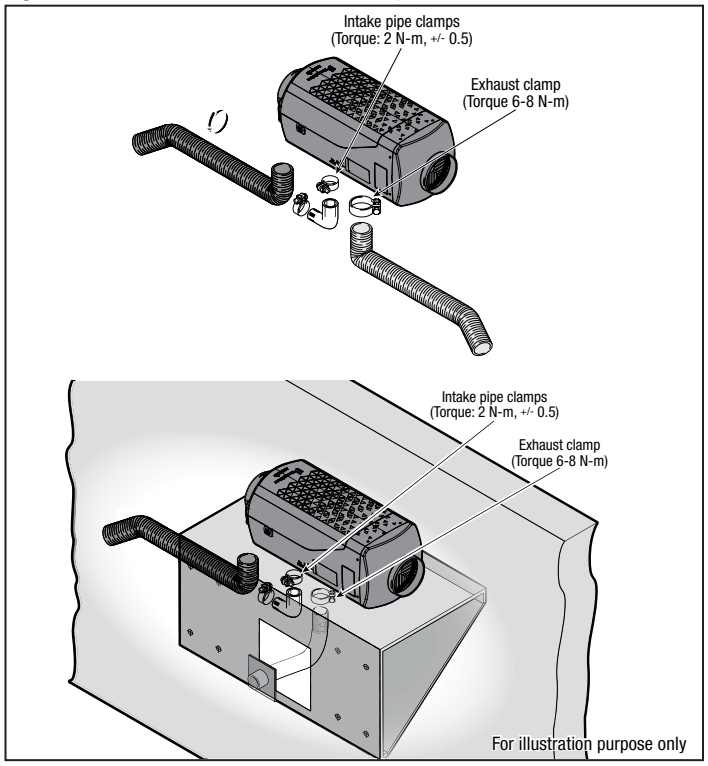

Figure 3.21: Fuel line Interfaces between Intake and Exhaust system

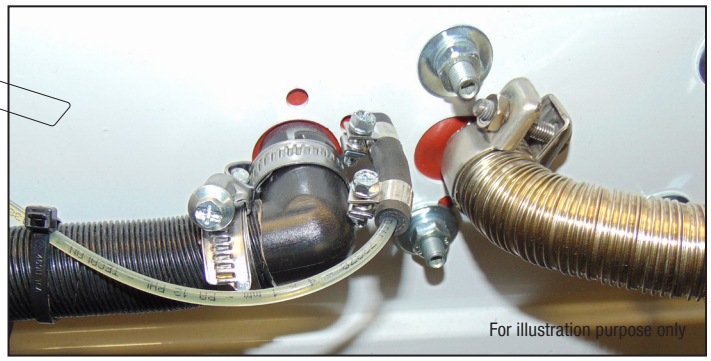

Figure 3.22: Exhaust insulation sleeve

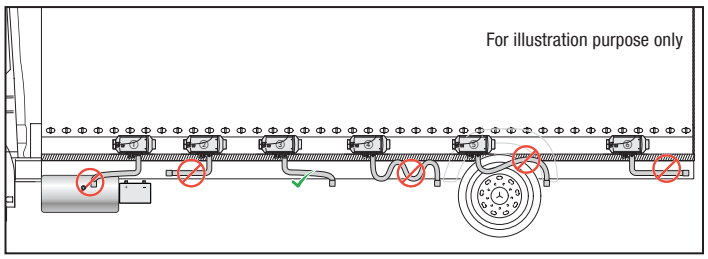

3 INSTALLATION PROCEDURES

MOUNTING PROCEDURES – ELECTRICAL SYSTEM

1) Scope of Supply: 12 V Electrical harness, fuse holder, grommets, ~~Digi-Max controller (depending on product variant)~~, temperature sensor, P clamp for harness, self-tapping screws.

2) All electrical connections related to C~~ARGO 5~~ assembly must be made as per electrical diagrams shown on pages ~~27, 28 & 29~~. It is recommended to select locations for ~~Digi-Max controller~~ (2-3 feet above floor if D~~igi-Max~~ is placed inside the trailer , see figure 3.4) prior to carry out electrical harness routing. Follow instruction provided on pages ~~25 - 26~~ for D~~igi-Max~~ controller installation and set up.

3) Airtronic ~~B/D5~~ heater comes with short electrical lead that interfaces with CARGO harness ~~with the help of 16 pin main connector~~. As ~~seen in figures 3.25 and 3.26, the 16 pin main connector of the heater has a locking mechanism ensuring firm interface with mating connector Figure 3.27 describes generic structure of CARGO 5 electrical system.~~

4) External temperature sensor must be mounted inside the cargo compartment at suitable location (see figure 3.4). Generally, it should be mounted at the middle of the wall that is nearer to the return air duct. The sensor must not installed in locations that are affected by hot air, exhaust fans, ventilation grills, or door movements, etc.

5) Route the harness from the heater to different components of the ~~CARGO 5~~ electrical system as shown in figure ~~3.27~~. Ensure sufficient clearance between the electrical harness and fuel line or hot air duct. Apply clipping points at suitable locations.

6) The wire harness must be secured to the trailer body by clipping it to suitable locations.

7) Apply electrical grease over terminals to ensure weather proofing (Read conductive and non-conductive grease types and application).

NOTE

- Wiring harness should be routed in such a way so it avoids touching any Wiring harness should be routed in such a way so it avoids touching any part of fuel lines. High voltage (i.e. 120 V) harness must never be in contact with any part of fuel system.
- For cargo application, it is recommend to place ~~Digi-Max~~ controller and temperature sensor together on the side wall within the trailer. Other mounting locations for ~~digimax~~ controller may possible (like within cab) for some trailer configurations only i.e. day cab. However, the temperature sensor must remain in the trailer.
- Always connect heater harness directly to the 12V DC battery. Do not interface it with electrical system of application (i.e.. generator system, AC-DC power converter), which can be exposed to transient currents, inductive/ reactive loads.
- Any modification or alteration of the CARGO harness to accommodate additional features (i.e. safety interlock, sensors, etc) must be done through consultations with Eberspaecher Climate Control Systems.
- For Cargo applications, batteries and fuel tank for the heating system must be available on the trailer.
- Fuse is inserted prior to system check during commissioning.

CAUTION!:

- Extreme care must be taken when dealing with electrical system i.e., 12V batteries. If necessary, ensure local electrical codes are followed when working with high voltage DC systems.
- Improper procedure for connections to the battery and other electrical equipment leads to severe electrical shock and burns; use extra care while handling the electrical system.
- Ensure that any part of the body or heating system is not wet, while working on the live electrical equipment to prevent unwanted events i.e. short circuit, electrical shock and fire hazard.
- When heater is grounded to the chassis, the negative terminal of the battery must be connected to the chassis as well to prevent overload on heater negative wire (brown).
- Disconnect the heater connections to the battery while performing any electrical work or welding on the vehicle.
- Improper heater installation including unauthorized wiring may lead to premature component failures (i.e. glow plug interruption).

3 INSTALLATION PROCEDURES

NOTE

- Ensure that there is sufficient slack in the harness during transitions between components that exhibit relative motion.
- The harness should be routed into any electrical box or enclosure from the bottom, allowing for some slack and a drip loop.
- Electrical harness and fuel line must be kept separated by appropriate fasteners as shown in figure 3.24.
- Details regarding temperature sensor options (i, ii, iii, iv as shown in figure 3.24) for heater control is available on page 35.

Figure 3.23:

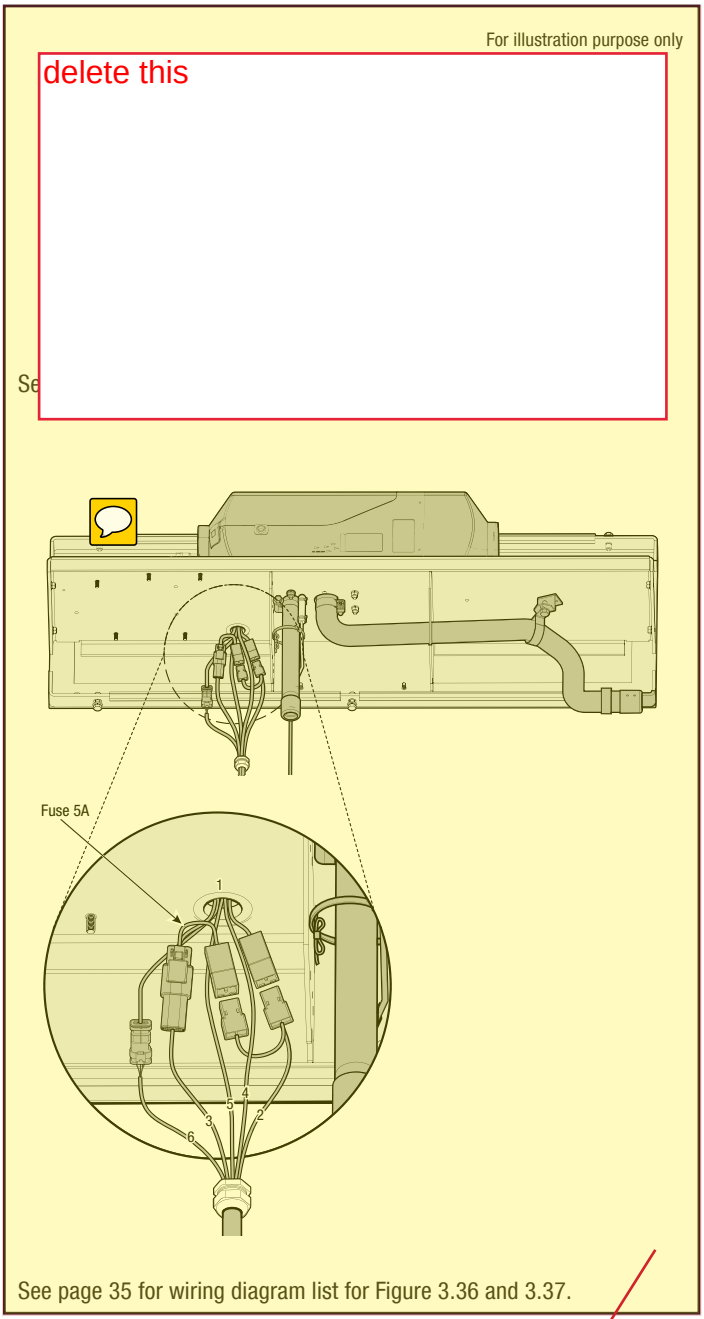

See page 35 for wiring diagram list for Figure 3.36 and 3.37.

Figure 3.24: Electrical System Layout

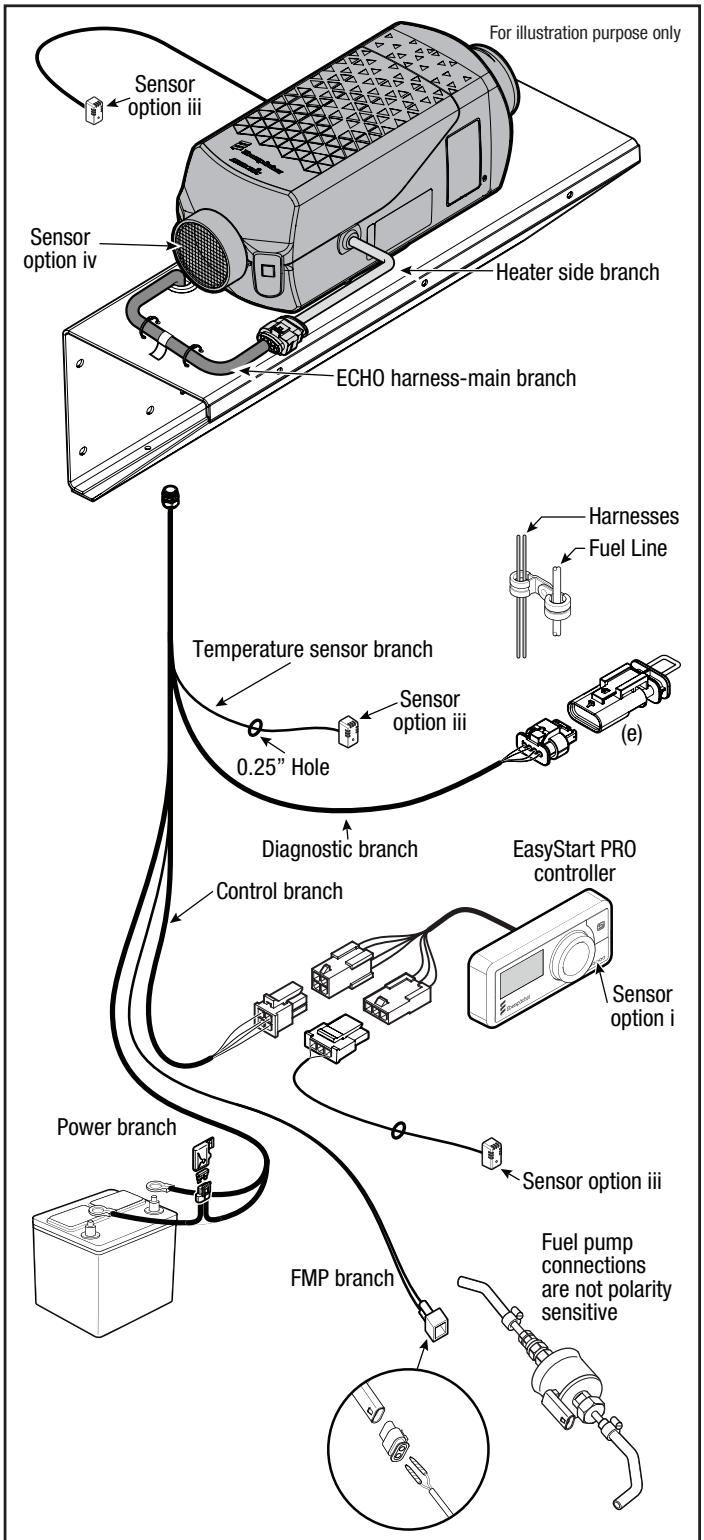

See page 35 for wiring diagram list for Figure 3.36 and 3.37.

Need changes

3 INSTALLATION PROCEDURES

EASYSTART PRO

BASIC INFORMATION

The EasyStart Pro is a cutting edge controller and timer designed to operate the AX3 heating system (including Echo 6) using the JEnetCAN communication protocol. Featuring a user-friendly control interface, it allows users to easily learn and execute commands. The device includes an integrated temperature sensor as well as a dedicated connector for an external temperature sensor to enhance heater control. This manual offers concise information on installation, wiring connections, and operational guidelines to assist both installers and users throughout the setup and usage process.

TECHNICAL DATA

Technical data (Table 3.3)

	EasyStart Pro
Operating voltage	12 volt / 24 volt
Dimensions	W : 82 mm, H: 37 mm, D: 19 mm
Allowable ambient temperature	– 40 °C to +85 °C
LCD ambient temperature	The display becomes sluggish at tempe-traures below –10°C, i.e. the flashing sequence of the symbols is somewhat slower. The contrast becomes weaker above +70°C.

Figure 3.25 : Description of the operating components

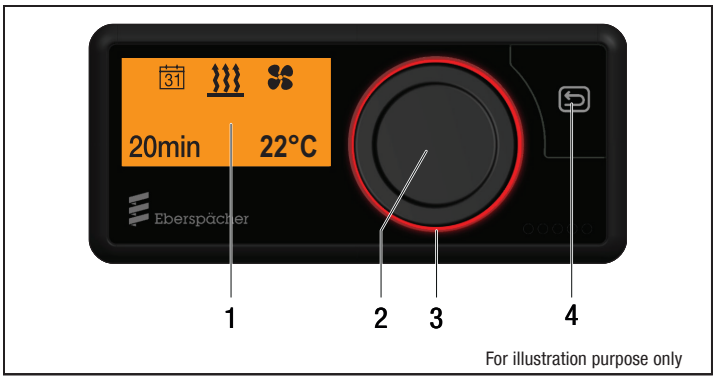

1 Display
The display shows the following parameters:
- Current operating mode
- Current interior temperature
- Operating mode
- Timer positions
- Settings
- Error codes

2 Operating button (Knob)
- The operating button is used to operate, select and program all the functions and values in EasyStart Pro. The operating button can be turned and pressed.

NOTE
- A LONGPRESS (min. 2 sec.) immediately starts all connected heaters. The standard operating time here is set at the factory to 30 minutes.
- During operation, a LONGPRESS (min. 2 sec.) immediately switches off all connected heaters.
- If terminal 58 has voltage, sleep mode will not be activated.

3 LED ring
- The LED ring with its different colours serves to indicate the operating mode.

– Red ring: Heating mode
– Blue ring: Ventilator mode
– Orange ring: Residual heat mode
– White ring: System configuration
– Red flashing ring: Fault in one of the connected heaters or in EasyStart Pro.

4 Button Back
- The BACK button causes a jump back to the menu or command at the next higher level.
- If EasyStart Pro is in sleep mode (display OFF), pressing “wakes up” the live mode again.
  – If all heaters are switched off, the Start mask will be displayed.
  – If a heater is running, the last mask is displayed.

THE MENUS AND THEIR FUNCTIONS



Menu bar

Status area

Symbol	Menu
	Heat
	Ventilate
	Residual Heat
	Settings
	Timer

Menu bar
The following menus can be selected from the menu bar (turn the operating button to the right):

NOTE
- The Ventilation function is only displayed if the heater supports this function.
- The timer function 31 is not available on vehicles in ADR mode.

STATUS AREA

When the menu (heat, ventilate, settings, timer or residual heat) is activated, various items of information are display in the status area. These are presented and described in the respective sections of these operating instructions.

INPUT AREA



Menu bar

Status area

DISPLAY:

e.g. Heating ON / Operating time 107 min.

In the input area, the symbol of the selected menu item appears in the middle of the display.
The corresponding setting value flashes in the input area and can be altered with the operating button by turning and confirmed by pressing.

3 INSTALLATION PROCEDURES

OPERATION MODES

HEAT
1. Select symbol.
2. Airtronic only: Temperature set point is displayed, rotate knob to adjust, press to accept.
3. Maximum heater runtime is displayed, rotate knob to adjust, press to accept.
4. To turn off or adjust temperature or run time select then select OFF or .

VENTILATE
1. Select symbol.
2. Maximum runtime is displayed, rotate knob to adjust, press to accept.
3. To turn off or adjust run time select symbol then select OFF or .

DISPLAY (WAKE UP/ SLEEP MODE)

DISPLAY WAKE UP MODE
- When the heater is ON (the display goes out after approx. 30 seconds).

DISPLAY SLEEP MODE

The display goes out after approx. 30 seconds if
- No settings are made.
- No heater is switched on.
- When using terminal 58, when the vehicle lights are switched off.

EasyStart Pro then goes to sleep mode.
EasyStart Pro then has to be activated (see above) before a new input can be made.

SELECTING A FUNCTION

The symbol of the function to be selected appears in the middle and flashing in the display.

Flashing function / flashing value
- Select the flashing function in the menu bar by pressing the operating button.
- Increase or decrease the flashing value by turning the operating button. Then confirm the selected value by pressing the operating button .

NOTE

Settings and changes must always be confirmed by pressing the operating button, otherwise they will be lost.

NOTE

If the display is not lit, EasyStart Pro has to be activated. Pressing the operating button or BACK button displays the Start mask; you can then continue with operation or setting.

NOTE

- Continuous heating mode ∞ is additionally possible for air heaters.
- The operating times of all connected heaters can be set independently of one another.

Figure 3.26 : EasyStart Pro Wiring Schematics

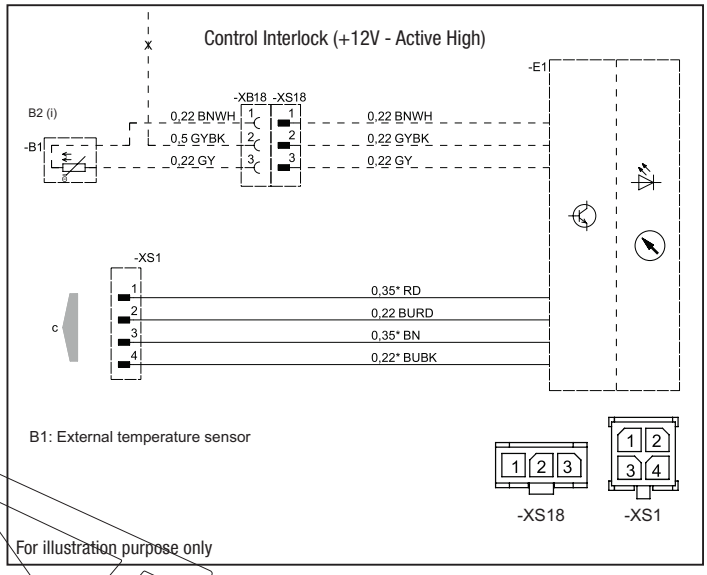

WIRING

PIN CONNECTIONS (Table 3.4)

PIN	WIRE COLOR	FUNCTION
1	RED	PWR (+)
2	BLUE/RED	CAN H
3	BROWN	GND (-)
4	BLUE/BLACK	CAN L

PIN	WIRE COLOR	FUNCTION
1	BROWN/WHITE	TEMP SENSOR GND (-)
2	GREY/BLACK	DISPLAY LIGHT (+) IN (X-58)
3	GREY	TEMP SENSOR IN

NOTE

Easystart Pro doesnt have LVD and safety interlock features. They are only available in EasyStart Pro - OEM variant which is used in ECHO 8.

3 INSTALLATION PROCEDURES

CONNECTION CAN LINE

Figure 3.27: One AX3 heater with two EasyStart PRO

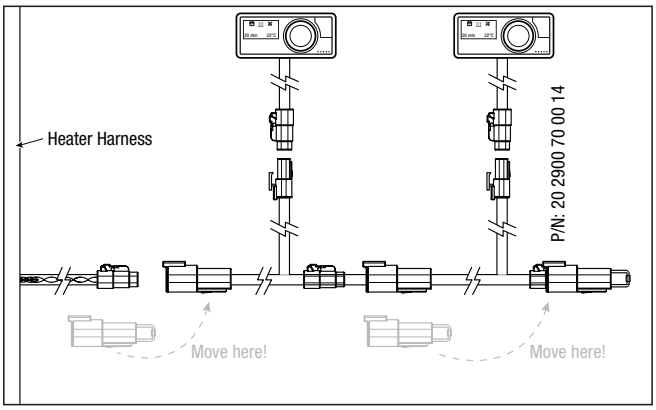

Figure 3.28: Two AX3 heater with one EasyStart PRO

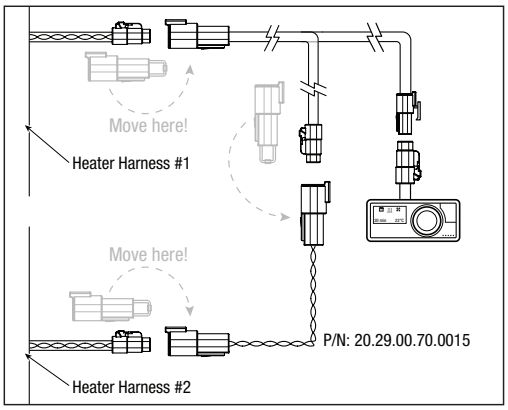

Figure 3.29: Control branch / EasyStart PRO Connectors

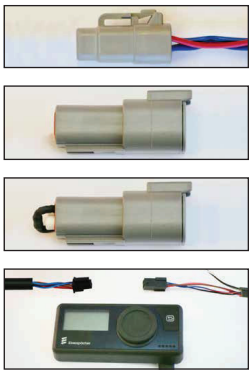

Figure 3.30: Electrical wiring diagram and schematic: one Ax3 heater with one EasyStart PRO

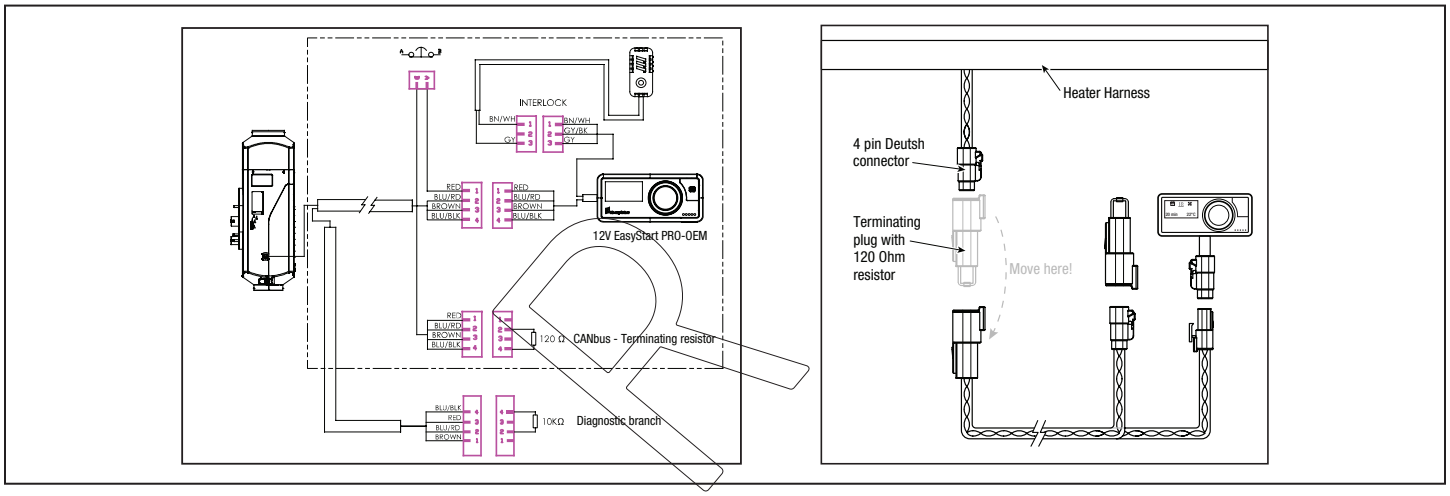

Figure 3.31: Electrical wiring diagram and schematic: Two Ax3 heater with Two EasyStart PRO

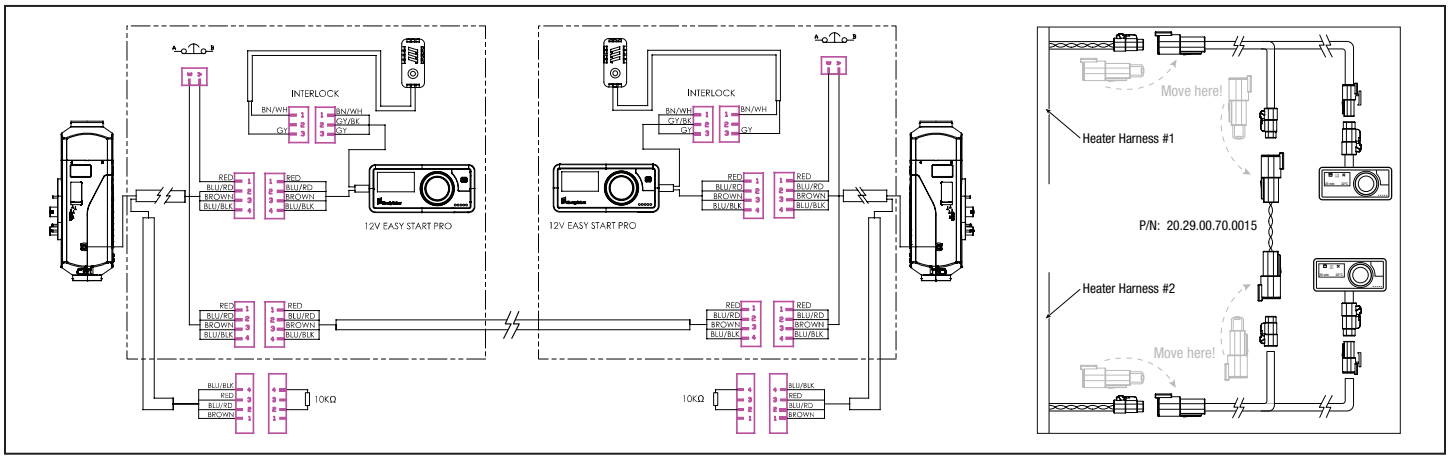

NOTE Please refer page 30 for more information on how to configure the heater group in Easystart PRO.

- Standard electrical system for ECHO 6 has one AX3 D6L heater and Easystart PRO configuration. Contact Eberspaecher Technical Support for information related to other heater configurations.

3 INSTALLATION PROCEDURES

INSTALLING EASYSART PRO

Figure 3.32: Easystart Pro Installation

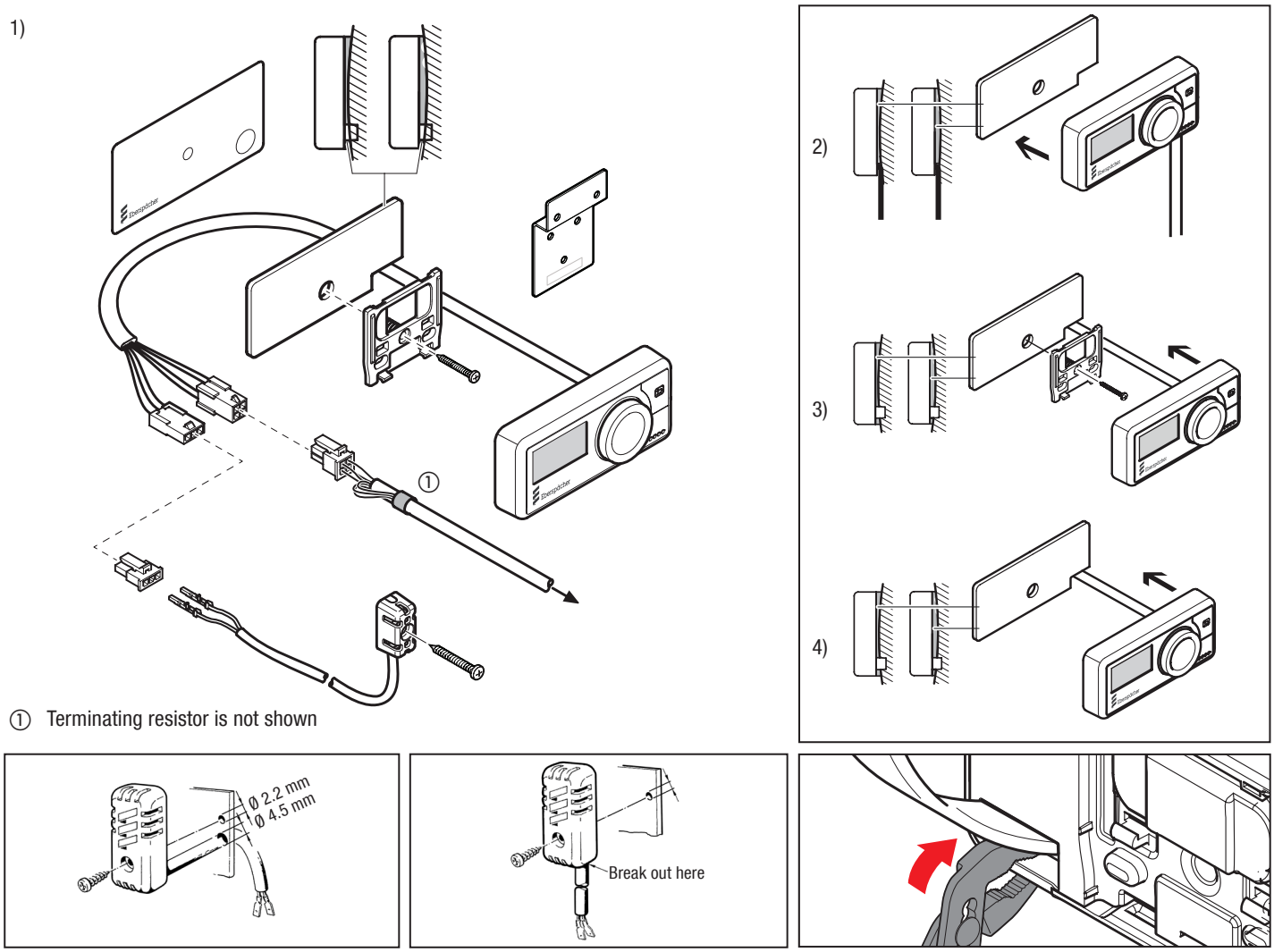

① Terminating resistor is not shown

NOTE

Temperature Sensor Mounting

- For the mounting location of an external temperature sensor on the trailer wall, please consult figures 3.8 and 3.9.
- Ensure that the temperature sensor is positioned in an area that is unaffected by any unintended temperature fluctuations caused by the ventilation fan, warm air, or movements of the trailer door.

For option ii of the external temperature sensor depicted in figure 3.37, it is advisable to utilize an extension cable from XS/XB12 to XS/XB18 if the installation site is located at a considerable distance.

NOTE

- For ECHO 6, the Easystart Pro is affixed using a self adhesive foam underlay, and its harness is aligned flush against the wall of the HMI Enclosure, as illustrated in mounting option (1) of Figure 3.33.

CAUTION!:

Risk of damage to the device when breaking out the housing section. Use pliers to break out the housing section and always break out the frame tab upwards towards the device rear panel.

For illustration purpose only

3 INSTALLATION PROCEDURES

EASYSTART PRO - INITIAL COMISSIONING

Begin the initial commissioning process for the EasyStart PRO to configure the default/standard settings, including language, temperature format, time, as well as further settings like control sensor input, temperature offset, and preheat timer function. Additional configurations can be made through the Workshop menu.

NOTE

All user settings configured during the initial commissioning will be retained in memory until they are deleted by performing a factory reset.

STANDARD SETTINGS - INITIAL COMISSIONING



- Select the desired display language by turning the operating button andconfirm by pressing.

Setting the time format
- Select between 12 h and 24 h format by turning the operating button and confirm by pressing.

Setting the time:
- Select the hours by turning the operating button and confirm by pressing.
- Select the minutes by turning the operating button and confirm by pressing.

Setting the weekday
- Select the weekday by turning the operating button and confirm by pressing.

Setting the temperature format
- Select between degrees Celsius and degrees Fahrenheit by turning the operating button and confirm by pressing.

FURTHER SETTINGS

DETERMINE / CONTROL SENSOR

During initial commissioning, EasyStart Pro asks whether an external temperature display sensor or control sensor is to be determined.

NOTE

An external temperature display sensor is available as an option.
For installation and connection to EasyStart Pro see page 13.

- For Air Heater: Set the control sensor input location from:

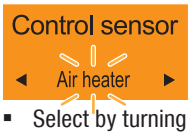

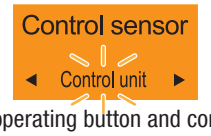

- Select by turning the operating button and confirm by pressing.

NOTE

If errors in the configuration are discovered after initial commissioning, the fuse must be removed to reset the system to the delivery condition.
- In some cases, errors related to the temperature sensor/ set point could trigger an emergency mode operation. Contact Eberpsaecher Technical Support If necessary.

CONTROL SENSOR INPUT (LOCATION)

Temperature Sensor (Types and Interface)	Control Unit (Easystart PRO)	Air Heater (AL3 D6L)
External Temperature Sensor (Preferred option for ECHO 6)	Electrical Interface: See option (ii) page 34-35 Physical connection: See option (ii) pages 23 and 27 Set up (Easystart PRO): In Workshop /settings, Select "Control Unit" for Control sensor input **Note:** Internal Temperature Sensor of EasyStart pro will become inactive Varification: Carry out function test via EasyStart PRO/EasyScan	Electrical Interface: See option (ii) page 33, 34, 35 Physical connection: See option (ii) pages 23 and 27 Set up (EasyScan): See page 48 for steps to reconfigure Pin 5 of XS/XB10 (Temp sensor/ setpoint input) Set up (Easystart PRO): In Workshop /settings, Select "Air Heater" for Control sensor input Note: Internal Temperature Sensor of heater will become inactive. Varification: Carry out function test via EasyScan
Internal Temperature Sensor (Must not be used for fresh air operation)	Electrical Interface: See option (i) pages 34 - 35 Physical connection: See option (i) pages 23 and 27 Set up (Easystart PRO): In Workshop /settings, Select "Control Unit" for Control sensor input **Note:** Default sensor in EasyStart PRO Varification: Carry out function test via EasyStart PRO / EasyScan	Electrical Interface: See option (iv) page 32 Physical connection: See option (iv) pages 57 Set up (Easystart PRO): In Workshop /settings, Select "Air Heater" for Control sensor input **Note:** Default sensor in Air heater Varification: Carry out function test test via Easystart PRO / EasyScan

DEFINE TEMPERATURE OFFSET

Select temperature offsent between range -5°C to +5°C



DEFINE THE STARTING OR DEPARTURE TIME

Select starting time in Easystart PRO to initiate the heating mode at preset time and day in a week.

Select departure time in Easystart PRO to finish the heating mode at preset time and day in a week.

DETERMINE THE MAINTENANCE INTERVAL

In the next step, EasyStart Pro asks for the maintenance interval for the heater. If desired, set the interval in hours by turning the operating button and confirm by pressing.
Otherwise select [OFF] and confirm by pressing.
- 10 h to 1000 h: 10 h increments
- 1000 h to 5000 h: 500 h increments



3 INSTALLATION PROCEDURES

WORKSHOP MENU

The workshop menu offers the following setting possibilities:
- Configuration change for the operation of EasyStart Pro
- Function modification (display, maintenance, reset to factory settings, etc.)
- Device info on EasyStart Pro (hardware and software version)
- Read out and delete heater and control unit fault memory

OPENING THE VEHICLE WORKSHOP MENU

To open the workshop menu, select the Settings menu and then hold the BACK button pressed for longer than 2 seconds while the clock symbol under the gear wheel is flashing.



STANDARD SETTINGS

DISPLAY LANGUAGE
The [Language] menu defines the display language.



Default language: English

DISPLAY
The [Display] defines the contrast and brightness of the display.



BRIGHTNESS



CONTRAST

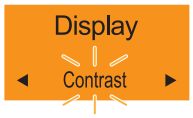

Adjust the brightness and contrast levels by modifying the value in %.

RESET TO FACTORY SETTINGS



Selecting Factory reset to Yes brings controller to delivery condition.
Following a factory reset, all user settings aredeleted and must be reconfigured.

SETTINGS AND INFORMATION ON THE HEATER

STARTING TIME / DEPARTURE TIME



NOTE
Refer starting/departure time on page 29.

CONTROL AND INDICATOR (DISPLAY) SENSOR (AIR HEATERS)





NOTE
- Refer page 29 for information related to control sensor and indicator (display) sensor function.

HOUR COUNTER



Displays operating hours of all connected heaters.

INFORMATION ON EASYSTART PRO

VERSION INFORMATION



MAINTENANCE AND DIAGNOSTICS

SET MAINTENANCE INTERVAL





Refer maintenance interval on page 29.

READ AND DELETE ERROR MEMORY



Use "Error memory" to read and delete fault codes from Heater and Control unit (Easystart pro).

NOTE
If an active fault exists, then it can not be deleted permanently. carry out heater diagnostics and troubleshooting (see page 31 and 50).

SWITCH HEATER GROUP







NOTE
To achieve simultaneous control of two identical heaters using a maximum of two Easystart Pro devices, it is necessary to group both heaters together. Conversely, for independent control of two distinct heaters with a maximum of two EasyStart Pro devices, the grouping of heaters is not required.

3 INSTALLATION PROCEDURES

FAULT DIAGNOSIS AND REMEDY

HEATER ERROR MESSAGES

Display	Description / Remedy
Service	Description ■ There is a fault in the heater that can only be remedied by a specialist workshop. Remedy / Customer ■ Visit an authorised Eberspaecher workshop.
Undervoltage	Description ■ Undervoltage applied at the heater control box without interruption for at least 20 seconds. Remedy / Customer ■ Charge battery or replace, if necessary. ■ Check battery for a drop in voltage.
Overvoltage	Description ■ Overvoltage applied at the heater control box without interruption for at least 20 seconds. Remedy / Customer ■ Check battery and replace, if necessary.
Fuel Supply or Pump	Description ■ Fault in the fuel supply or fuel pump. Remedy / Customer ■ Check cables for continuity, short circuit and damage. ■ Pull the plug off the metering pump and inspect for damage. ■ Check the fuel level in the fuel tank. ■ If the fault cannot be remedied, please contact Eberspaecher Support.
Air Ducting or Outlet	Description ■ With air heaters only: Air temperature in the heater too high. Remedy / Customer ■ Check the air lines. Are air lines clogged or kinked? Are all air louvres free? ■ The heater can be reset to the delivery condition by removing the heater fuse. ■ If the fault cannot be remedied, please contact Eberspaecher Support.
Overheat. Heater locked.	Description ■ Overheating of the heater detected. The heater is interlocked for safety reasons. Remedy / Customer ■ The heater can be reset to the delivery condition by removing the heater fuse. ■ If the fault cannot be remedied, please contact Eberspaecher Support.
Restricted Operation	Description ■ Emergency running of the heater. Remedy / Customer ■ There is a fault in the heater. Restricted operation is still possible, however (with air heaters with target temperature 20°C). ■ If the fault cannot be remedied, please contact Eberspaecher Support.

NOTE

In the event that EasyStart Pro displays fault codes as P0017xx, it is advisable to reach out to Eberspaecher technical support for additional assistance.

CONTROL UNIT ERROR MESSAGES

Display	Description / Remedy
◄ 1 ► Ext. Temp. Sensor defective	Description ■ The external temperature sensor is defective. Remedy / Customer ■ Check the wiring of the external temperature sensor for continuity, short-circuit or damage; replace the temperature sensor, if necessary. If the fault cannot be remedied, please contact Eberspaecher Support.
◄ 2 ► Int. Temp. Sensor defective	Description ■ The internal (in the controller) temperature sensor is defective. Remedy / Customer ■ There is no remedy for this fault. The control device (EasyStart Pro) has to be replaced.
◄ 3 ► Rotary Knob jammed	Description ■ The operating button is blocked. Remedy / Customer ■ Can the operating button be freed again by hand? If the fault cannot remedied, please contact Eberspaecher Support.
◄ 4 ► Pushbutton jammed	Description ■ The button is blocked. Remedy / Customer ■ Can the button be freed again by hand? If the fault cannot be remedied, please contact Eberspaecher Support.
◄ 6 ► Missing Data	Description ■ Data are missing for EasyStart Pro for initial commisioning. Remedy / Customer ■ Disconnect EasyStart Pro from the power supply and connect again. If the fault cannot be remedied, please contact Eberspaecher Support.
◄ 7 ► Timer mode not allowed	Description ■ Timer mode is not permitted during ADR mode. Remedy / Customer ■ Terminate ADR mode and test timer mode again. If the fault cannot be remedied, please contact Eberspaecher Support.
◄ 8 ► Operation not supported	Description ■ The heater is in auxiliary heating mode via Switching Plus and cannot be operated via EasyStart Pro during this time. Remedy / Customer ■ Terminate auxiliary heating mode via Switching Plus.
◄ 9 ► CAN communi-cation error	Description ■ Communication error on the CAN bus link. Remedy / Customer ■ Inspect the wiring for cable breakages/short-circuits. If the fault cannot be remedied, please contact Eberspaecher Support.

NOTE

Anytime heaters comination changed (added, removed or repaired heater) the controller will display a "Mismatch" message and unfortunatelly will enter configuring mode. Confirm the message by pressing the knob and selected control display sensors, temperature off set and start time mode.

DRAFT #1 – Stand: 02.2025 – NCN Design & Illustration: 02/16/2025

3 INSTALLATION PROCEDURES

6 WIRING DIAGRAMS

Figure 3.35: Wiring diagram - AX3 4/6 KW Heater

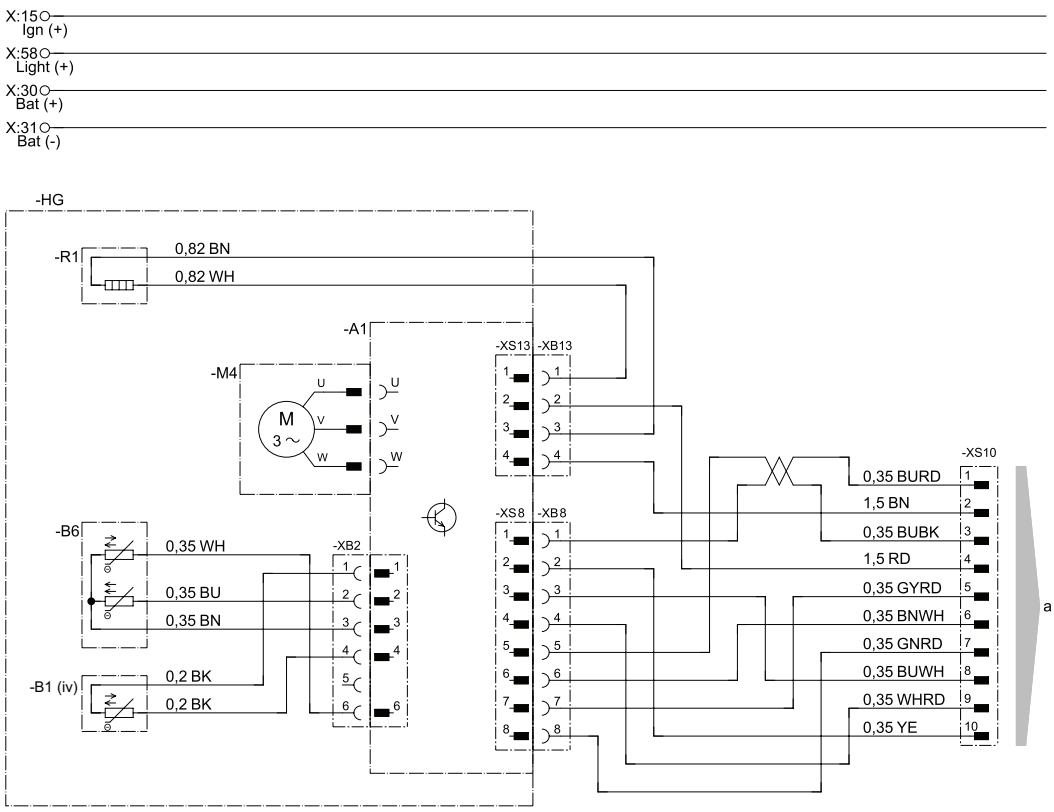

For illustration purpose only

ELECTRICAL WIRING DIAGRAM - PARTS LIST

HG	Heater
A1	Control Unit
M4	Blower Motor
R1	Glow Pin
B6	Overheat and Flame sensor
B1(iv)	Internal Temperature Sensor
XS13/XB13	4 Pin Connector ECU (Blower/ GP)
XB2	6 Pin Control Connector (ECU)
XS8/XB8	8 Pin Main Connector ECU I/O
XS10 / XB10	10 Pin Main Connector (Harness)

3 INSTALLATION PROCEDURES

Figure 3.36: Wiring Diagram - CARGO 6 Harnesses

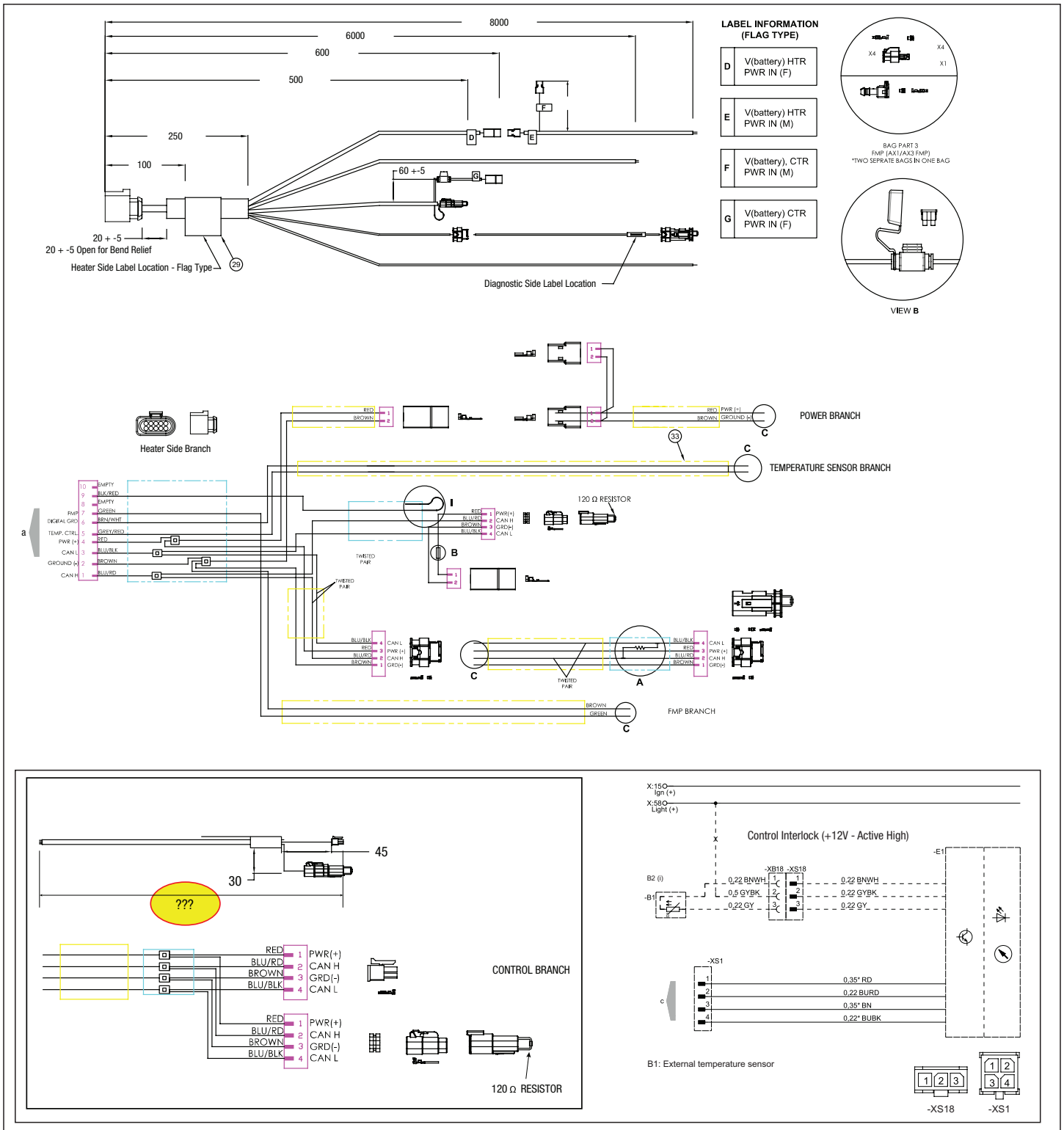

▪ Cargo harness comes with 20A fuse. In some cases replace it with 25A fuse if necessary.

All dimensions are in mm (ft)

DRAFT #1 – Stand: 02.2025 – NCN Design & Illustration: 02/16/2025

3 INSTALLATION PROCEDURES

Figure 3.37: Wiring Diagram - CARGO 6 Electrical System

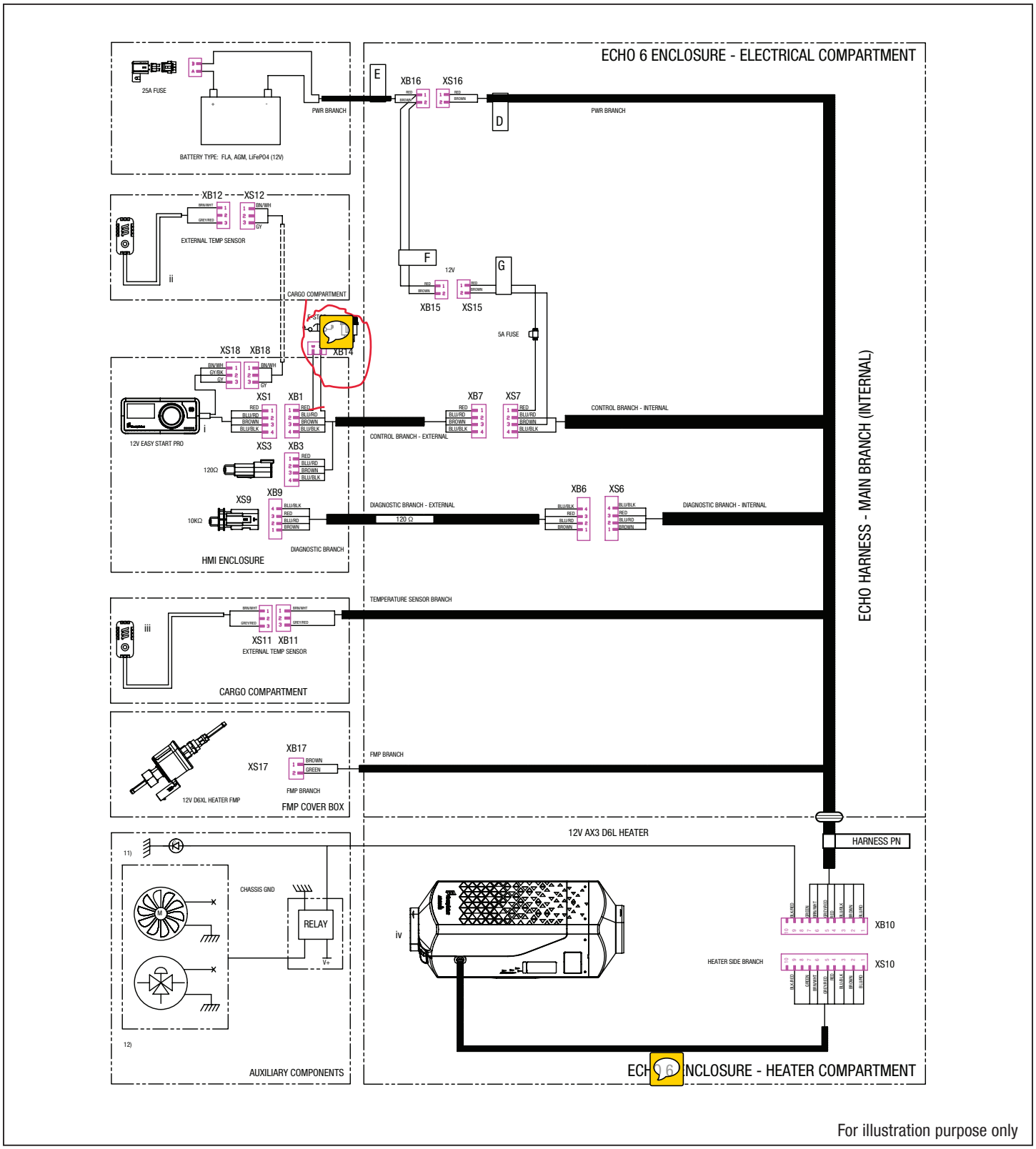

For illustration purpose only

3 INSTALLATION PROCEDURES

WIRING DIAGRAM LIST : ECHO/CARGO 6 harness (Figure 3.37)

1) CARGO 6 Harness - Main Adapter Branch (To Heater)
2) CARGO 6 Harness - Power Branch (To Battery)
3) CARGO 6 Harness - Adapter Control Branch (To Easystart pro)
4) CARGO 6 Harness - Temperature sensor Branch
5) CARGO 6 Harness - FMP Branch
6) CARGO 6 Harness - Diagnostic Branch (To Easyscan)
7) CARGO 6 Harness - Digital Signal output - Multipurpose (Auxiliary Components)
8) Easy Start Pro Pigtail
9) External Temperature Sensor /w Pigtail
10) E-Stop connection
11) LED light (Heater ON signal, or Blink code for diagnostics)- Configure via Easyscan
12) Blower Fan, Blender Door, Solenoid Valve, Switch (Active High - Continuous or Intermittent based on values of control sensor and setpoint) - Configure via Easyscan

WIRING DIAGRAM LIST: CARGO 6 ELECTRICAL SYSTEM

XS1/XB1: 4 Pin Connector Control Branch (EasyStart PRO, with built intemperature sensor - option i)
XS3/XB3: 4 Pin Connector - Control Branch (Cap with120kohm)
XS6/XB6: 4 Pin Connector - Diagnostic Branch
XS7/XB7: 4 Pin Connector - Control Branch
XS9/XB9: 4 Pin Connector Diagnostic Branch (Cap with10kohm)
XS10/XB10: 10 Pin Main Connector at Heater
XS11/XB1: 2 Pin Connector - External Temperature Sensor Branch (option iii)
XS14/XB14: 2 Pin Connector - E-stop
XS15/XB15: 2 Pin Connector - PWR Branch (for Easystart PRO Control)
XS16/XB16: 2 Pin Connector - Main PWR Branch Connector (for Heater)
XS17/XB17: 2 Pin Connector - FMP Branch (at FMP)
XS18/XB18: 3 Pin Connector Temperature Sensor Extension Branch (option ii)
XS18/XB18: 3 Pin Connector External Temperature Sensor Branch (option ii)

NOTE

- During installation, relocate diagnostic cap (10 kohm resistor) from XS6 to XS9.
- During installation, reuse available XB7 connector cap (discard 120 ohm resistor) and connect external control branch. Secondary cap with terminating resistor is already available at external control branch.

CABLE COLOURS:

red = power (+)
yellow = switch
brown = ground (-)
grey = FMP Signal (+)
grey/red = temperature setting
grey/Black = Interlock/ Display Light Signal
blue/white = diagnostic from heater
brown/white = ground
black/red = Digital Signal - To be configured via EasyScan. (See page 48)
blue/Red = JEnet CAN High
blue/ Black = JEnet CAN Low

NOTE

- Ensure following requirements are met while selecting an extension cable for power branch:
  - Ensure maximum allowable voltage drop do not exceed 0.5 V for 12 V rated voltage (At the main connector of the heater).
  - Cable length must not exceed to more than 30 feet.
  - Use appropriate gauge size wires for extension cable: 8 / 10 gauge (depending the cable length).
  - An improperly installed electrical cable may be affected by environmental effects i.e. vibration, water ingress, moisture penetration, galvanic corrosion, static discharge, etc.
  - Avoid: Chafing, kinking, jamming or exposure to heat.
  - Lubricate connections with appropriate type of electrical grease.

TEMPERATURE SENSOR OPTIONS FOR THE HEATER CONTROL:

i) Use built-in Temperature Sensor of the EasyStart Pro controller as a control sensor (set as default in Easystart pro).

ii) Connect an external temperature sensor to pin 1 and 3 of 3 pin connector of the EasyStart Pro to use as a control sensor (if detected, EasyStart Pro will automatically select this sensor as a primary control sensor.

iii) Connect an external temperature sensor at the temperature sensor branch of the harness. To use this option, ensure the Pin 5 of XS10 is code to operate as temperature sensor input using EasyScan. Also reset the control sensor to Air heater in EasyStart Pro controller. Contact Eberspaecher authorized dealer or Technical support for further information.

iv) Use internal temperature sensor within heater. Reset the control sensor to Air heater in EasyStart Pro controller.

NOTE

- Use option (i) only if the EasyStart Pro is located inside the cargo compartment.
- Never use option (iv) while using a Fresh air configuration of the duct system.
- For option (ii). Cut and reuse the temperature sensor branch of the heater harness to add an extension to the external temperature sensor.

NOTE

- Pin 9 of XS/XB10 is a digital signal output that can be configured using EasyScan (see page 48), so it can be used for various purpose as explained on page 38.

NOTE

- Enhance the CARGO 6 by incorporating the 110V AC to 12V power converter assembly (Part Number: 20.2900.70.0172) for shore power connectivity. Contact Eberspaecher technical support for further information.

DRAFT #1 – Stand: 02.2025 – NCN Design & Illustration: 02/16/2025

3 INSTALLATION PROCEDURES

COMMISSIONING PROCEDURE – CARGO 6 ASSEMBLY

Commissioning procedure is meant to verify heating system after installation using two part process 1) system check 2) Functional test (using EasySCAN diagnostic system).

NOTE

- For complex cargo applications, it is necessary to provide commissioning details (application data, pictures, system check, functional tests, etc.) to Eberspaecher Climate Control Systems.

SYSTEM CHECK: Following 10 point checklist will provide you quick inspection of overall heating system prior to heater start up during commissioning.

1)	Check if structural parts of the heating system are securely installed (Check interfaces, tightness of mounting fasteners).	☐
2)	Is heater installed securely using provided mounting shock absorbers. (Verify tightness of mounting fastener)	☐
3)	Is duct system securely attached to heater (Check tightness of clamps).	☐
4)	Is fuel system securely installed (check fuel interfaces, clamp tightness, leakages).	☐
5)	Is exhaust pipe fastened securely (check for clamp tightness), leak-proofing).	☐
6)	Are electrical connections in power convertor compartment as per wiring diagram? (check fuse, pin locations, continuity and grounding).	☐
7)	Is wire harness attached to battery securely (Check for tightness, voltage).	☐
8)	Is EasyStart PRO controller turned on (set up the controller).	☐
9)	Is external temperature controller installed properly (See page 35).	☐
10)	Is there diesel fuel in the tank (prime fuel line).	☐

FUNCTIONAL TEST - EASYSCAN DIAGNOSTIC SYSTEM IS RECOMMENDED:

1)	Start up the heater (measure battery voltage at the diagnostic connector: 12V+/- 1).	☐
2)	Using EasyStart PRO controller, add set point value to 30 °C, record ambient temperature and compartment temperature values.	☐
3)	Once heater is in control stage (measure voltage at diagnostic connector: 12V +/- 1).	☐
4)	After 15 min, carry out temperature measurements by placing probes at 30 cm from the inlet and outlet port of the heater (Delta T: < 100 °C).	☐
5)	Measure Exhaust temperature if possible (EGT value, ensure exhaust is not returning back into heater or cargo compartment).	☐
6)	During operation, monitor the heater behavior, exhaust direction, vibration, abnormal sounds, etc.	☐
7)	Turn the set point down to compartment temperature (heater must cycle down to low or stand by) .	☐
8)	Turn the set point back up to 30 °C (heater must turn in to high mode).	☐
9)	Place some object in front of heater outlets about 1 feet away (Heater should cycle down to low or stand by depending on outlet air temperature).	☐
10)	Shut down the heater (measure voltage: 12 V +/- 1 Monitor shutdown cycle duration).	☐

RESULT:

1)	System check must be Ok.	☐
2)	Heater must function normally without giving any fault condition.	☐
3)	Heater must receive 12 V +/- 1V during its operation.	☐
4)	Delta T between inlet and outlet of the heater must be limited to 100 °C. Inlet temperature must be limited to 40°C during control stage of the heater.	☐
5)	Heater must cycle up and down with respect to the set point change.	☐
6)	Heater should cycle down without overheat if cargo is placed at the distance of 1 feet of inlet and outlet grills.	☐
7)	Heater operation must not be affected while operating with 12V (within operating range 10.5 - 15 V).	☐
8)	Heater must complete its shutdown cycle properly.	☐
9)	During entire operation, heater must not generate black smoke, bad smell or abnormal sound.	☐
10)	EasyStart PRO controller must be set up as per page 26 of this manual .	☐

COMMISSIONING APPROVAL:

1)	Fulfill additional requirements specific to application if necessary.	☐
2)	Collect all data, pictures and functional report (forward it to Eberspaecher Climate Control Systems if necessary)	☐
3)	Apply identification label (Heater) at the interior part of the driver side window if necessary.	☐
4)	Notify warranty department of product installation & commissioning date.	☐
5)	Record all documentation and provide its copy to customer.	☐

4 FUNCTION AND OPERATION

4. FUNCTION AND OPERATION

NOTE

The heater function is to provide heat (medium: air), which is regulated and controlled by its electronic control unit based on various inputs like signals from external controller (HMI), etc.

INSTRUCTIONS FOR OPERATION

Safety checks before starting up the heater

After a lengthy stoppage, check all components for secure fit (tighten screws where necessary). Carry out a visual check of the fuel system for leaks.

Heating at high altitudes

Due to the integrated air pressure sensor, the Airtronic 3 has automatic altitude adjustment up to 5500 m asl.

NOTE

Automatic altitude adjustment of the Airtronic M3 up to 4000 m asl.

External temperature sensor at the heater

The heater adjusts its output to the value of the internal temperature sensor in accordance with the factory setting. If the heater is activated via CAN or LIN, an external temperature sensor can be connected, which records the temperature values in any place inside the vehicle and controls the heater.

NOTE

- The external temperature sensor (analogue) must be coded via EasyScan. please refer steps available on page 29.
- For information about the temperature sensor and control unit combination options see Easystart Pro section.

INITIAL STARTUP

The following points are to be checked by the company installing the heater during initial commissioning.

- After installing the heater, the whole fuel supply system must be carefully vented: please refer to and follow the vehicle manufacturer's instructions.
- During the heater trial run, all fuel connections must be checked for leaks and secure, tight fit.
- If faults occur while the heater is running, use a diagnostic unit to determine and correct the cause of the fault.

FUNCTIONAL DESCRIPTION

Switching on

When the heater is switched on, the indicator in the control unit lights up. The glow plug is switched on and the fan starts at low speed.

NOTE

- The heater can only be switched on if the actual temperature value at the temperature sensor is less than the internal temperature setpoint of the heater.
- If there is still too much residual heat in the heat exchanger from when the heater was last used, firstly only the fan starts up (cold blowing). Once the residual heat has been cleared, the heater starts.

Starting the Airtronic

The start sequences are sensor controlled and depend on the ambient temperature. The fuel delivery starts after 65 seconds at the latest. The heater produces the maximum heating level first and then continuously adjusts its output automatically depending on the heating output requirement. After the flame sensor has detected the flame, the glow plug is switched off. The heater is now in normal operation.

Temperature selection with the control unit

The control unit can be used to preselect the interior temperature. The resulting temperature can be within the range of +10 °C to +30 °C and depends on the selected heater, on the size of the space to be heated and on the prevailing outdoor temperature. The setting to be selected at the control unit is an empirical value.

NOTE

If a temperature setpoint is not selected at the control unit, the heater heats according to a temperature setpoint specified by the system. The temperature setpoint is 20° C.

Control in heating mode

During heating mode, the room temperature or the temperature of the hot air drawn in is constantly measured. If the temperature is higher than the temperature preselected at the control unit, the control starts.

The heating output is controlled continuously, so that fine adjustment of the heat flow supplied by the heater to the heat requirement is possible. The fan speed and fuel quantity correspond to the respective control stage.

If the set temperature is still exceeded in the smallest control stage, the heater goes to the “OFF” stage with the fan running on for approx. 4 minutes to cool down. Then the fan continues at minimum speed (circulation mode) or is switched off (fresh air mode) until the heater is started again.

Switch off

When the heater is switched off, the control lamp goes out and the fuel delivery is switched off. The fan runs on for approx. 4 minutes to cool down. The glow plug is switched on for several seconds to clean it during the fan after-running.

Special case:

If no fuel has been delivered or if the heater is in the “OFF” stage until it is switched off, the heater is stopped without any after-running.

NOTE

NoteThe heater function is to provide heat (medium: air), which is regulated and controlled by its electronic control unit based on various inputs like signals from external controller (HMI), etc.

4 FUNCTION AND OPERATION

CONTROL AND SAFERY DEVICES

- The start sequence is sensor controlled. The length of the start sequence varies depending on the basic conditions such as voltage supply, fuel quality, outdoor temperature, etc. In unfavorable conditions, such as a weak vehicle battery, the startup procedure can take up to 4 minutes.
  There is no automatic restart. Depending on the basic conditions, the after-running can also last up to 4 minutes.
- If the flame goes off by itself during normal operation, the heater is restarted first. If the heater does not ignite the flame within a good minute after the fuel delivery has restarted or if it ignites but the flame goes out again within the starting sequence, a safety lockout (shutdown on faults) takes place, i.e. fuel delivery off and fan after-running of approx. 4 minutes. The safety lock-out can be cancelled by briefly switching off and on again. Do not repeat the switching off/on sequence more than 10 times.
- In the event of overheating, the combined sensor (flame sensor / overheating sensor) triggers, the fuel supply is interrupted and a safety lock-out occurs. Once the cause of the overheating has been eliminated, the heater can be re-started by switching off and on again.
- If the lower or upper voltage limit is reached, a shutdown on faults takes place after 20 seconds.
- The heater does not start up when the glow plug or the fan motor is defective or when the electric lead to the metering pump is interrupted.
- If the combined sensor (flame sensor / overheating sensor) is defective the heater does not start and the safety lockout (shutdown on faults) takes place.
- The speed of the fan motor is monitored continuously. If the fan motor does not start or if the speed deviates significantly, safety lockout (shutdown on faults) takes place.
- When the heater is switched off, the glow plug is switched on for several seconds (after glowing) while the fan carries on running to clean off any combustion residues.

NOTE

- If the burner motor fails there is no after-running.
- Do not repeat the switching off/on sequence more than 10 times.

Emergency stop – EMERGENCY OFF

If an emergency stop – EMERGENCY OFF – is necessary during operation, proceed as follows:
Switch the heater off at the control unit or remove the fuse or disconnect the heater from the battery.

NOTE

Slight smoke and/or odor can develop during the initial commissioning of the heater. This is completely normal during the first minutes of operation and is not an indication of a malfunction.

Switch output (Pin 9 of XS/XB10 connector - Black/Red or White/Red)
The switch output (whrd) can be coded for the following applications via EasyScan (See steps mentioned in page 48):

- Switching signal ON
  – if heating (incl. afterun) or ventilation mode active
  – depending on the control sensor and set point values. Switching signal ON on exceeding the lower control value. Switching signal OFF on falling below the upper control value -10 °C
  – on falling below the maximum heating output
- Function display and error output via flashing code (default).
- Continuous Signal ON (Representing heater state ON)

NOTE

One of the following options should be configured through the coding menu in Easyscan (page 48), based on the intended application:

- Flashing code ON:
  - To provide blink codes during heater fault via LED
- Continuous signal ON:
  - To provide heater status ON/OFF via LED
  - To activate components while heater ON
- Fresh air ventilating:
  - To activate devices (i.e fan, blending door) based on temperature sensor and set point values while in ventilating mode
- Fresh air heating:
  - To activate devices (i.e. fan, blending door) based on temperature sensor and set point values while in heating mode

5 BASIC TROUBLESHOOTING AND SERVICE PROCEDURES

BASIC TROUBLESHOOTING

In the event of failure there are several items which should be checked first before any major troubleshooting is done. It is recommended to carry out a visual inspection or perform steps as described in this as well as trouble-shooting manual. if diagnostic tools are not used.

Visual inspection:
- Circuit breakers and fuses.
- Electrical lines and connections.
- For interference in combustion air and exhaust pipes.
- Check the fuel in the tank.
- Battery voltage (>11.8 V).
- Check On/off signal wires (yellow, blue/white wire). Check interface with EasyStart pro controller.
- Carry out visual inspection of the duct system.

Troubleshooting Check list:

What happens when the heater is switched on and...

Heater does not ignite

1 Blower motor starts (within 10-30 sec) if it doesnt start or shuts down after 20 sec, then check:
- **Check:** - Fuse in power harness.
- Check voltage at battery, and connectors of PWR and Control branch.
- Communication error - Easystart pro.
- Temperature sensor value >set point .
- Component wiring interruption.

2 Blower motor runs/fuel metering pump starts and then shuts down after two start up attempts
- **Check:** - Fuel lines and fuel filter.
- Fuel quantity see page 55.
- Combustion air or exhaust tube blockage.

3 Blower motor runs/no fuel metering pump
- **Check:** - For electrical pulses at fuel metering pump.
- If pump is frozen.
- Blocked fuel line.

NOTE
- If the heater has a failed start attempts or overheats (10 times), the heater locks out. It must be unlocked first by deleting the actual fault using Easyscan or Easystart PRO.
- In case of the heater lock out due to overheating, it can also be unlocked by following steps:
  - Switching ON
  - Remove fuse within 20 sec
  - Reinsert fuse after around 5 secs
  - Restart the heater again.

Heater ignites

1 Shuts down at random
- **Check:** - Possible overheat.
- Control unit input voltage.
- Insufficient fuel flow (air bubble, blockages)

2 Heater smokes and carbons up
- **Check:** - Exhaust pipe blocked.
- Combustion air intake blocked.
- Exhaust entering combustion air intake pipe.
- Short cycling, rapid on/off operation.
- Fuel system.
- Fuel metering pump position and quantity.
- Motor rpm.

3. Heater shuts down due to overheat
- **Check:** - Duct system
- Combination sensor
- Blower fan

EASYSCAN DIAGNOSTIC FOR ECHO 6

Easyscan is an advanced diagnostic and service tool designed specifically for the AX3 heating system (including ECHO 6). Its primary capabilities include the extraction and deletion of error codes, the provision of real-time operational data, and the generation of diagnostic reports. Furthermore, it facilitates the commissioning process for the ECHO 6 assembly.
The following pages contain information regarding the installation, activation, operation, and diagnostics of EasyScan.

ORDER NO.
Order No.: 22.1550.89.0000

Figure 5.1 : The scope of supply includes:

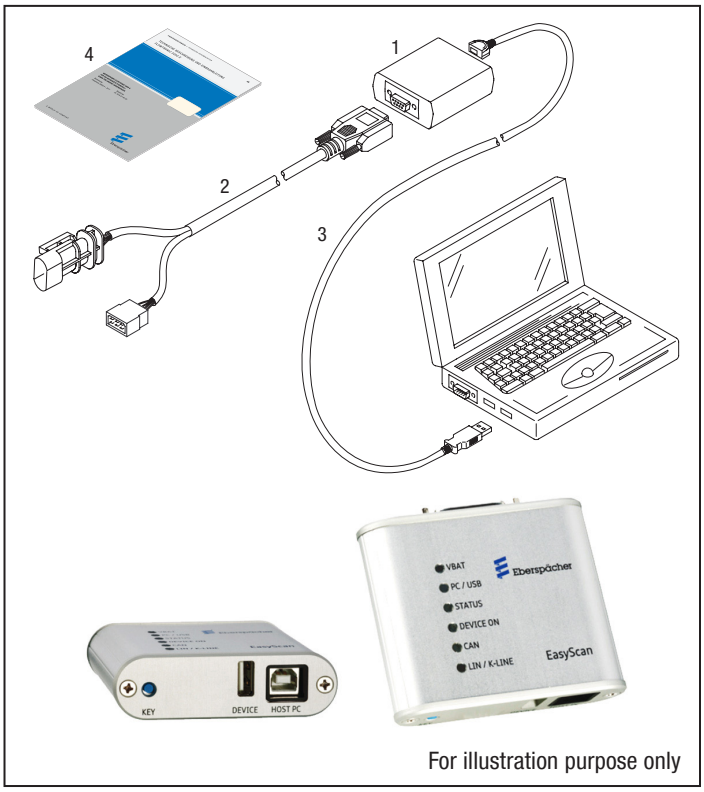

For illustration purpose only

SCOPE OF SUPPY (Table 5.1)

No. in sketch	Quantity	Designation
1	1	VCI
2	1	“Diagnostics interface” connection cable
3	1	“PC” connection cable
4	1	Quick start guide

5 BASIC TROUBLESHOOTING AND SERVICE PROCEDURES

Figure 5.2 : EasyStart PRO dimensions

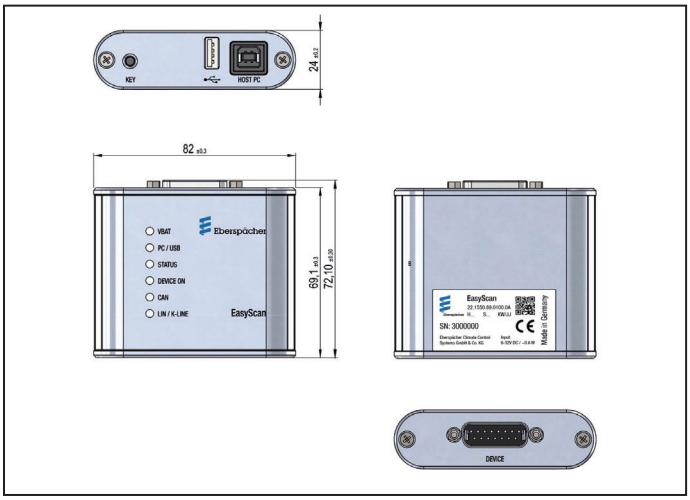

DEVICE CONNECTIONS (Table 5.2)

KEY	Key function: Restore the software
USB	Not used
Host	PC “PC” connection cable connection
DEVICE	Diagnostics interface” connection cable connection

TECHNICAL DATA (Table 5.3)

Compatibility	Water heaters Hydronic 1 (12 V), Hydronic 2 (12 V), Hydronic 2 Commercial (12 / 24 V) Hydronic M II (12 / 24 V) Air heaters Airtronic 1 / Airtronic M / Airtronic L (12 / 24 V) all future heaters
Temperature range (°C)	-40 °C to +70 °C
Dimensions L×W×H (mm)	82×72×24
Class of protection	IP 20

4
LED Description (Table 5.1)

Designation	Colour	Signalling	Operating state
VBAT	GREEN	dark	Power supplynot connected or is outside the allowablerange (VBA T < 6V or VBAT > 32 V)
		illuminated	Power supply connected and is within the allowable range (VBAT > 6V up to VBAT < 32V)
PC / USB	YELLOW	dark	No PC connection (USB not connected)
		Illuminated	VCI is connected with the PC (USB connected)
		flashing	Data is being transferred between the PC and the VCI
STATUS	GREEN	dark	Software in the VCI is not ready for use (fault condition)
		slow flashing (1 Hz)	Software in the VCI is ready for use (normal condition)
		fast flashing (2 Hz)	The devices is in bootloader mode, the software in the VCI is faulty or has not been installed (fault condition)
DEVICE ON	RED	dark	On-cable for heating inactive
		Illuminated	On-cable for heating active
CAN	BLUE	dark	Communication via CAN bus not in operation
		flashing	CAN communication in operation. The flash frequency indicates the CAN bus load
LIN / K-LINE	BLUE	dark	Communication via LIN / K-LINE not in operation
		flashing	LIN / K-LINE communication in operation. The flash frequency indicates the bus load

SYSTEM REQUIREMENTS

Check before installing the software
- Is an operating system, which supports the software, installed on the PC or notebook?
- Are the minimum hardware requirements for the supporting operating system met?

Supporting operating systems:
Microsoft Windows 7 or newer versions.

Minimum hardware requirements:
- 1 gigahertz (GHz) 32-bit (x86) or 64-bit (x64) processor.
- Hard drive: with at least 16 Gbyte (32-bit) or 20 Gbyte (64-bit) free memory.
- Working memory (RAM): at least 1 Gbyte (32-bit) or 2 Gbyte (64-bit).
- DirectX 9 graphics device with WDDM 1.0 or higher drivers.
- CD ROM or DVD drive.
- USB 2.0 interface (port).
- Screen: resolution min. 800×600 dots (recommended 1024×768 or higher), colour palette 65536 colours or more, small text.

NOTE
If the minimum requirements are not fulfilled, the EasyScan 1.0 software cannot be installed.

5 BASIC TROUBLESHOOTING AND SERVICE PROCEDURES

SET UP - EASYSCAN INSTALLATION

PREPARING FOR THE INSTALLATION

CAUTION!
Eberspächer Climate Control Systems GmbH & Co. KG does not accept any liability whatsoever for any data loss on your PC.
→ We recommend that you back up the data on an external hard drive before installing the software.

NOTE
- For the initial installation of the software the user who carries out the installation must be logged into the PC / notebook with administrator rights.
- Administrator rights are not required for all other actions.
- If the installation CD is not available, the software can be downloaded from the Eberspächer Partner Portal at partner eberspaecher.com.
- The software contains all the drivers required for the VCI.
- Depending on the operating system and set language, the names of the system directories may differ from those used in this quick start guide.
- The names of the English installation of Windows 7 are used in this quick start guide.

INSTALLING EASYSCAN

See figure 5.2 for visual snapshots of all steps related to Easyscan software installation.

1) Install Easy Scan software from Installation CD or download it online at partner.eberspaecher.com
2) In some cases, a VCI firmware update may be required while setting up Easyscan software wizard (follow the detailed set up procedure provided in section 3.2 of EasyScan manual).
3) If VCI is not connected, appropriate error message is displayed.
4) Once set up is completed, click "finish" in Easyscan set up wizard menu.

NOTE
If the Setup Wizard finds that programs required for execution of the software to be installed is not available it starts the necessary programs.
Follow the Wizard's instructions and click “Next” (do not click “Finish”).

NOTE
After installing the “EasyScan testing software” the Connection Assistant starts.

AUTOMATIC FIRMWARE UPDATE

The following instructions must be carried out:
- Check whether “PC” connection cable is connected to the VCI and to the PC / notebook.
- Check the power supply:
  – Status LED (green) on the VCI is lit –> power supply connected,
  – Status LED (green) on the VCI is not lit –> connect the power supply.
- Confirm completed instructions by clicking the “OK” button.

NOTE
Do not disconnect the USB connection between the PC / notebook and VCI during the firmware update under any circumstance.

If no VCI is connected an error message appears.

NOTE
Depending on the performance of the PC / notebook, several minutes may be required for the installation.
TIP: For faster installation, copy the program data from the CD onto the hard drive and start the installation from there.
During the installation, follow the instructions on the screen, accept all default paths and do not change them.

The installation process may take several minutes.

NOTE
Do not disconnect the USB connection between the PC/notebook and VCI during the firmware update under any circumstances. In case of any interruption in connection, an error message appears.

ENDING THE INSTALLATION

Finish the software installation by clicking the “Finish” button.

NOTE
After completing the installation or after clicking the EasyScan icon in the program bar or on the desktop, the **Home page** is displayed for the current heater generation.

5 BASIC TROUBLESHOOTING AND SERVICE PROCEDURES

Step 1:

Figure 5.2: Installing Easyscan Software

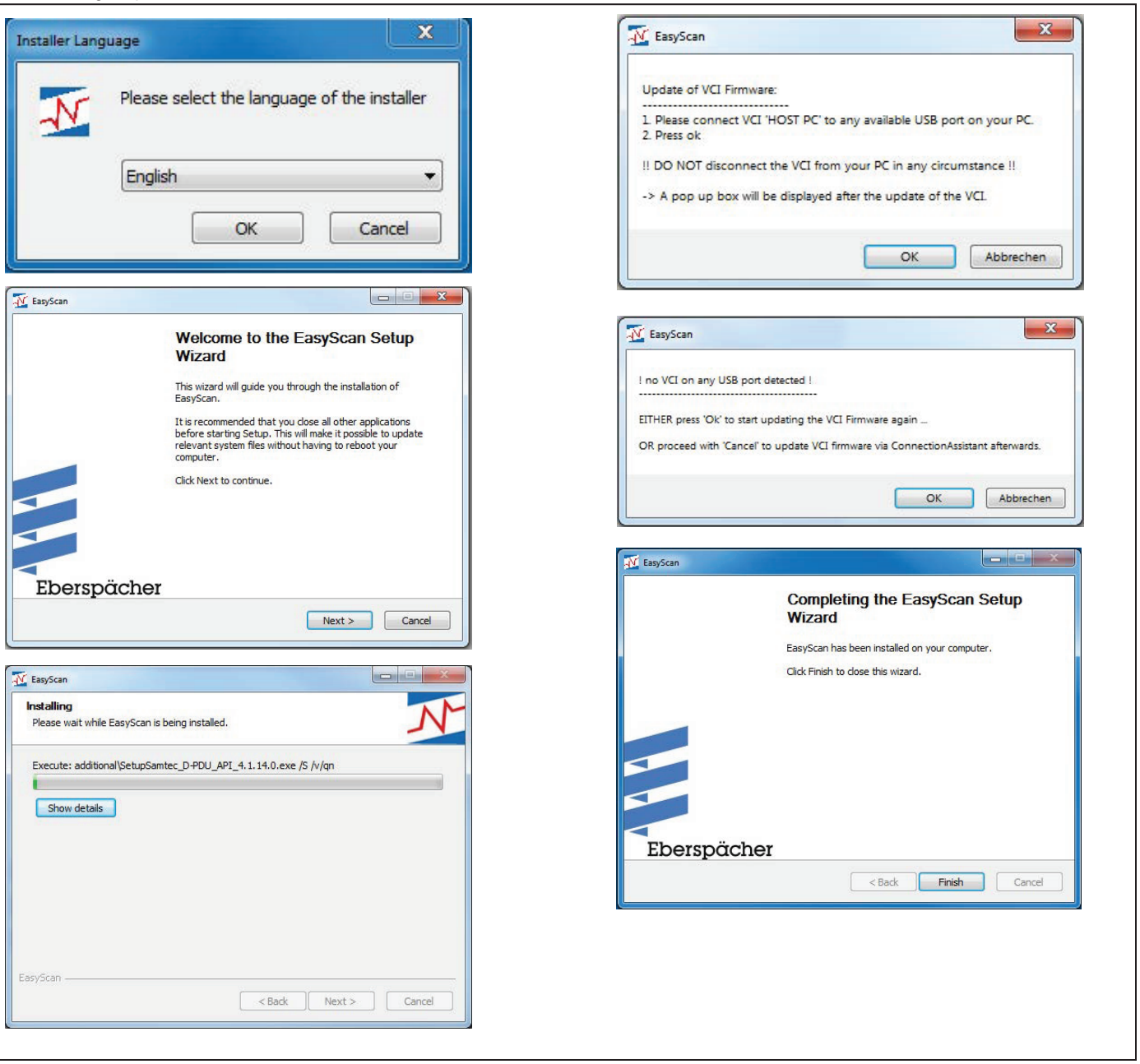

5 BASIC TROUBLESHOOTING AND SERVICE PROCEDURES

ACTIVATING EASYSCAN

NOTE

Activation is only necessary for the initial startup.

1) Select "Activate via VCI Link" in the selection window
2) Click the "Next" to continue the activation
3) End the activation by clicking the "Activate" button and exit the program
4) Restart the program if necessary

Figure 5.3 : Activating EasyScan

Step 1: Select "Activate via VCI Link" in the selection window

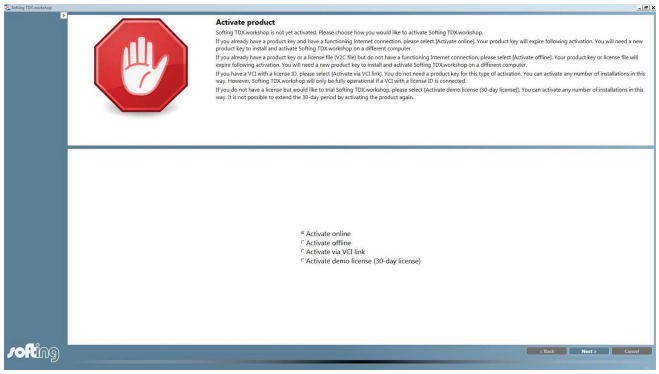

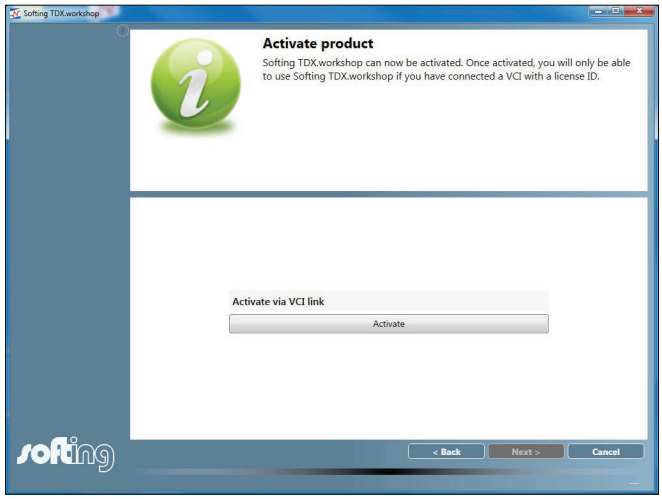

INTERFACE THE EASYSCAN WITH THE HEATER

Interface the EasySCAN with the heater, see figure 5.1

1) Connect the "PC" connection cable to USB port of PC/notebook and to the "Host PC" connector.
2) Connect the diagnostic connector at heater harness to the VCI. In ECHO 6, the diagnostic connector should be available in HMI enclosure.

STARTING THE EASYSCAN PROGRAM – new heater generation

1) Login or Skip login. For Login, the username and password are available through the national representative.
2) Successful logging in is indicated in green. In case or any errors, it is shown in red under the input field.
3) If restart is needed, then start by clicking EasyScan icon.

NOTE

Use login option for unlimited functionality. In case of username and password is not available, user can access a limited functionality of Easyscan by clicking on "Skip Login".

Figure 5.4 : Starting the EasyScan – New heater generation

Step 2: Click the "Next" to continue the activation

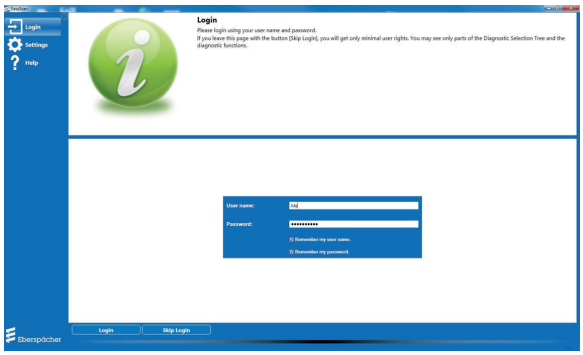

If no login window is displayed for entry of the user name and password, go to “Settings – General settings – User login” and deselected the selected option “ Do not display the user login page and always log in as a standard user.”.

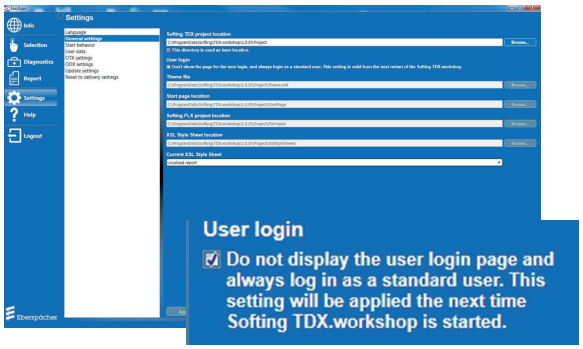

The top part of the Home page contains three buttons for navigation between the linked HTML pages on the Eberspaecher Partner Portal, the button functions are:



Back to Home page



Back to the last HTML page



Go to the next HTML page.

NOTE

The instructions are saved as a PDF file under “User Manual” under the “Help” menu item and on the CD included in the scope of supply.

5 BASIC TROUBLESHOOTING AND SERVICE PROCEDURES

LOGGING OUT OF THE PROGRAM

- You can log out on all pages with the button.



- On logging out all running diagnostic functions are ended.
- After the logout the program switches back to the Start or Login page.

EXIT THE PROGRAM

Exit the program by clicking the operating system button  (Close).

Step 3: End the activation by clicking the "Activate" button and exit the program

LAYOUT 1:

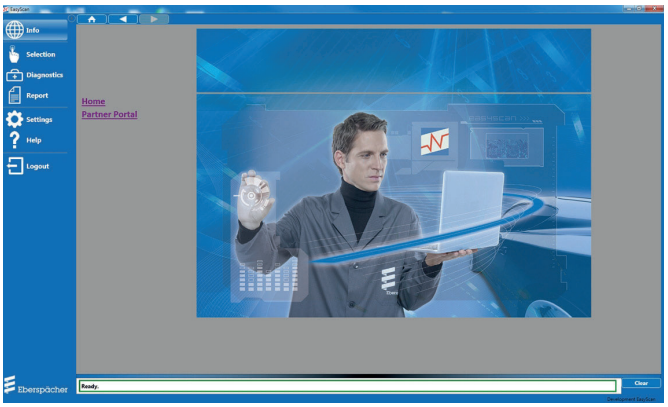

The user interface is divided into 4 areas.

1 Title row	3 Working range
2 Menu column	4 Message bar

NOTE

Grouping element "Tools" is to open signal viewer to playback recorded signals from imported report file.

- 1.1: Description element
- 1.2: Grouping element
- 1.3: Control box (heater) element
- 1.4: Diagnostic element
  - ☑ 1.4.1: General data
  - ☑ 1.4.2: Measured value
  - ☑ 1.4.3: Fault memory
  - ☑ 1.4.4: Function and component activation
  - ☑ 1.4.5: Workshop report

Diagnostic functions

HEATER DIAGNOSTICS - GENERAL STEPS

1) Once home screen is opened, use selection item in menu column to open selection tree. Please refer Selection Menu Item for further information.

2) Click on selection tree to choose applicable Air heater and heater type.

3) Select the diagnostic functions. (General data, measured values, fault memory, functions and component activation, workshop report).

4) Click on diagnostics in menu column to open diagnostic tabs (inner tabs represent diagnostic functions and outer tabs represent heater types). Please refer Diagnostics Menu Item for further information on page 45 & 46.

5) Each selected outer tab contains following inner tab functions (common data, measured values, fault memory, function-and component activations and workshop report).

6) In measured values tab, a number of signals can be selected for read out cyclically. Any error while reading out the faulty function is displayed in RED.

7) Select a maximum of six signals in Diagram tab to visualize a real time plot of those selected measured values.

8) Start cyclical reading to record signals in the file system (preset is selected to start automatically).

9) Plot signals and log measured values to save all recorded signals traces as X/Y value pairs in report as well as allow play back in the program file.

10) Stop functional test of heater by clicking heater OFF (Easyscan and controller) and stop measured value display by clicking time out.

11) Read an active and stored fault codes as well as delete them using fault memory tab by clicking read fault memory and clear fault memory buttons. Click "log measured values" button to save all faults and information from the fault memory in the file system.

12) Carry out component test by clicking start self test on selected components in Functions and Component activation tab.

13) Click report menu to open the most recent diagnostic report (in HTML or XML format). It can be cleared, saved or printed by clicking appropriate buttons. For further information on Report Menu Item, please see page 46.

14) Use settings menu to change or access program related parameters like language, window layout, user log in, user data, start page location, program, hardware and software information etc. For further information regarding Settings Menul Item, please see page 46 or Easyscan Technical Manual.

15) In case of support, access user manual from help menu.

5 BASIC TROUBLESHOOTING AND SERVICE PROCEDURES

SELECTION MENU ITEM

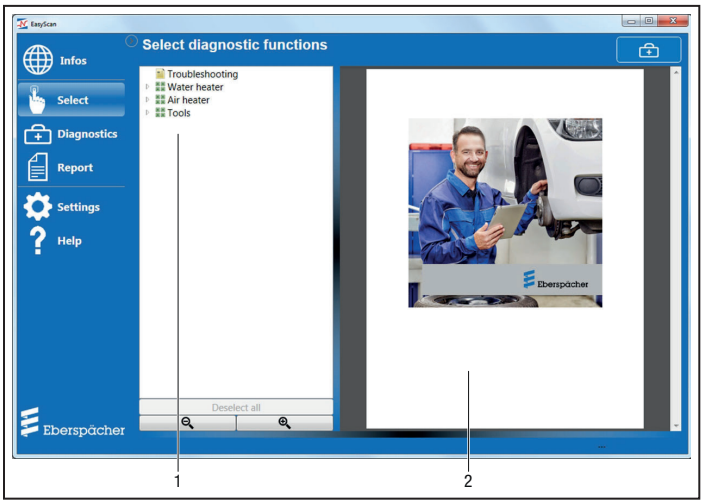

1 Selection tree 2 View window with document

NOTE

- Diagnostic functions and heaters selected in the selection tree are saved and are displayed again with the next start.
  If the information is not required, remove the tick next to the heater.
- The save is carried out individually for each logged in user.
- A document with further node-specific information is stored for each node in the selection tree.
- The document is loaded and shown by clicking a node.
- Nodes below a heater represent diagnostic functions. A short functional description is stored for each of these nodes.

DIAGNOSTIC MENU ITEM

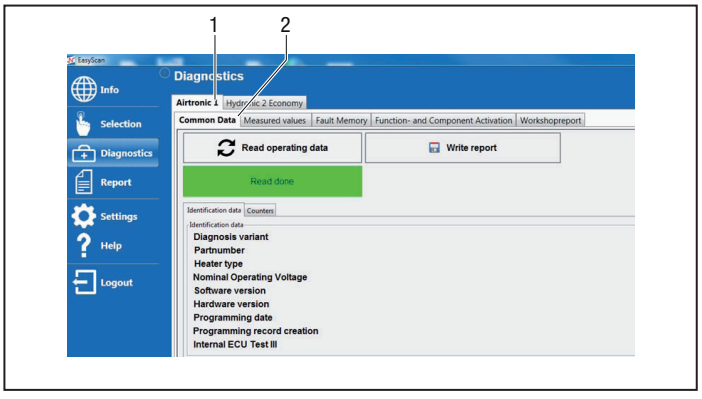

1 Outer tabs 2 Inner tabs

NOTE

- Only the diagnostic functions selected under Section 7.2.4 are displayed as tabs in the workspace.
- The first time a diagnostic function tab is selected the corresponding diagnostic function is started.
- On switching between the tabs the diagnostic functions remain activated.
- The diagnostic function shown in the figure is only an example.
- The description of the user interface or how the individual diagnostic functions work is given on the following pages.

"MEASURED VALUES" TAB

SELECTING AND DISPLAYING SIGNALS

NOTE

- The number of signals can vary depending on the heater.
- The signals selected in the menu column are read out cyclically.
- The number of selected signals affects the "refresh rate" of the measured values.
  – We recommend selecting only those signals actually required.
  The fewer the signals that have to be read, the more measured values per second can be determined for each signal. This achieves a higher time resolution.
- If errors occur while reading out the faulty function / component is displayed in red.

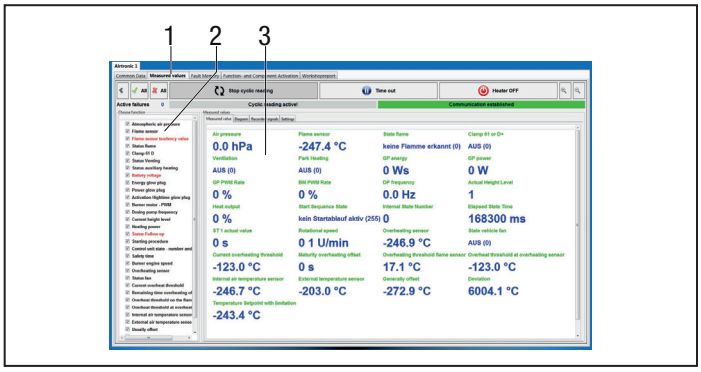

1 "Measured values" tab 2 "Choose function" window
3 Measured values of the selected signals

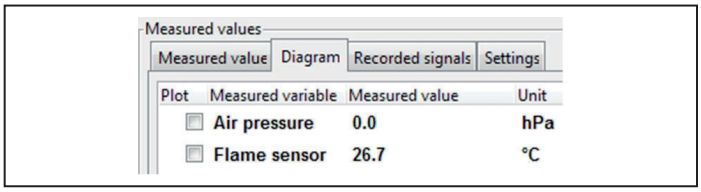

STARTING CYCLICAL READING

NOTE

All selected signals are read out and displayed as quickly as possible in the control box.
These signals are also stored temporarily internally and are filed in the file system at certain time intervals.
If "Cyclic reading" is active, other signals can be added or removed dynamically.
This has the following effect:

- A new signal is added.
  – The signal is not saved temporarily in the file system.
- An existing signal is removed and added again if applicable.
  – The signal is also stored temporarily in the file system.
  However, the signal value = 0 is used for the period during which the signal is not selected.

5 BASIC TROUBLESHOOTING AND SERVICE PROCEDURES

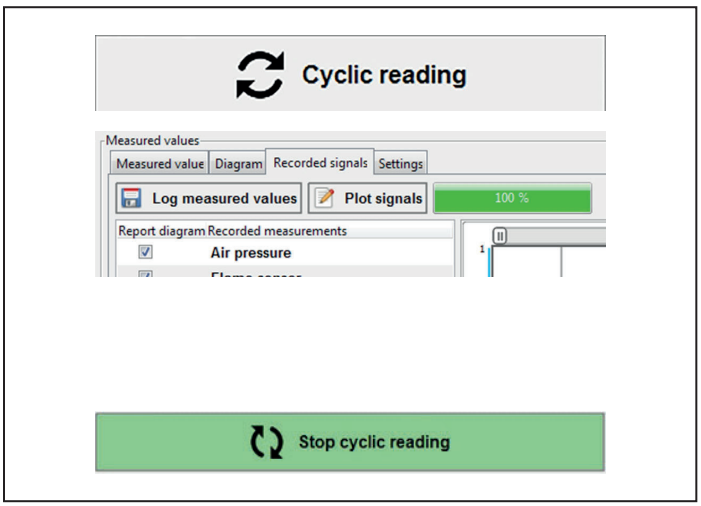

PLAYING BACK SIGNALS AGAIN

NOTE

- The recorded signals are available in the file system until a new measurement is started. In this case all recorded signals are deleted from the file system.
- The zero point does not correspond to the time when the heater was switched on, but the time at which cyclical reading was started.
- However, if the heater is started and cyclical reading is then switched on immediately, the two zero points are located directly next to each other.

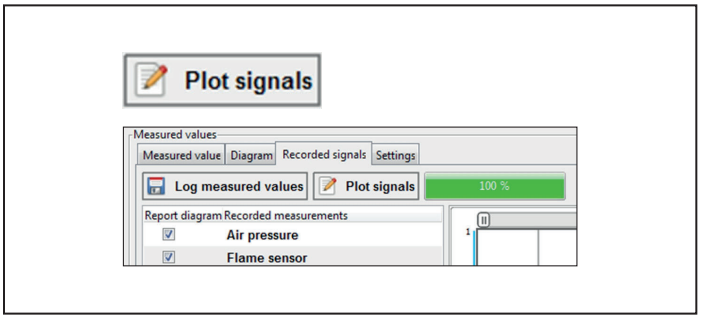

STOP MEASURED VALUE DISPLAY

NOTE

Only the display is frozen. The measurement continues.
Diagrams and saving the signals in the file system are not affected by the pause.
Stop the measured value display by clicking the “Time out” button.

READING OUT THE FAULT MEMORY

NOTE

The fault memory can be read out once or cyclically. The required type can be set using the button next to the “read fault memory” button.
If cyclical reading is active you can switch between active and saved faults.

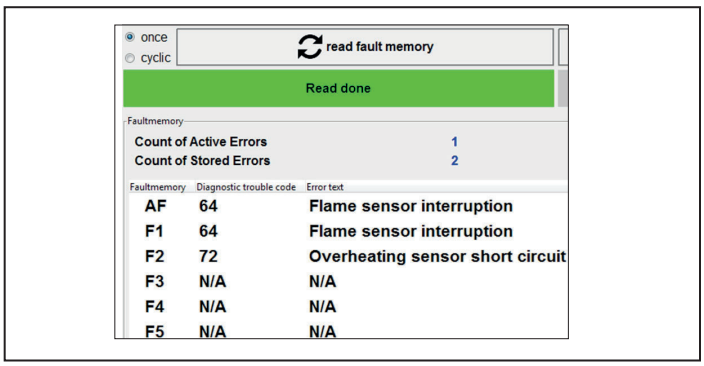

DELETE FAULT MEMORY



LOG THE FAULT MEMORY IN THE DIAGNOSTIC REPORT

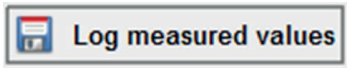

“FUNCTIONS AND COMPONENT ACTIVATION” TAB

STARTING / ENDING THE SELF-TEST

NOTE

- The self-test can be exited prematurely.
- If the self-test is running, heating mode cannot be requested. Individual actuators cannot be activated.

Open the “Functions and Component Activation” tab in the workspace.

Start self-test by clicking the button



Yellow display:	Grey display:
Feedback from the control box about the status of the current self-test. The status is queried cyclically until the self-test is completed.	Remaining time until the self--test is completed.

Possible states are (Table 5.6):

Start	Assigned text
0x00	Self-test not ok
0x01	Self-test ok
0x02	Self-test in progress
0x03	Self-test not yet performed or cancelled

5 BASIC TROUBLESHOOTING AND SERVICE PROCEDURES

Heater ON

Self-test cannot be requested if heating mode is running. Individual actuators cannot be activated.



Heater OFF

If the control box has accepted the operating mode, the display changes to

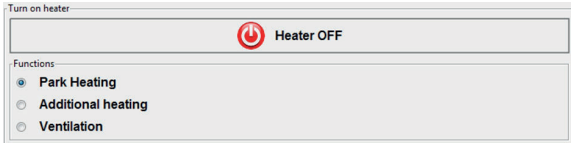

Exit the selected operating mode and switch off the heater by clicking the "Heater OFF" button.

FAULT MEMORY STATUS

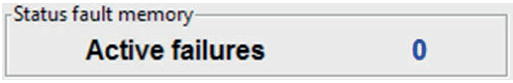

NOTE

If certain active faults exist these are frequently caused by the fact that components cannot be activated or heating mode cannot be started.
Query fault memory status.

"REPORT" MENU ITEM

Click "Report" in the menu column to open the menu item.
The report can be displayed alternatively in HTML or in XML format.

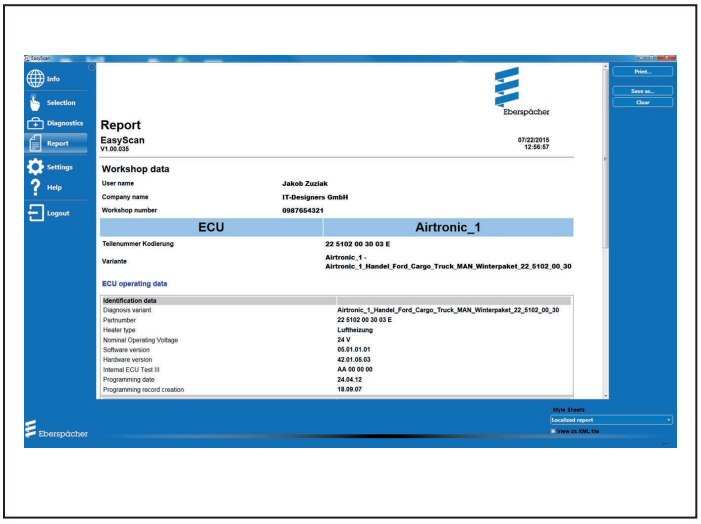

The following actions (top right-hand side of page next to the Eberspächer logo) can be carried out with a report:

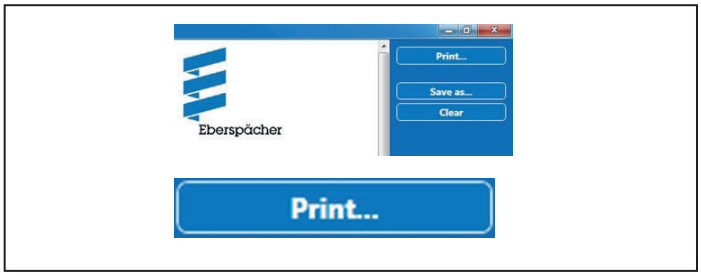

The Print dialog of the operating system is opened.
The report can be printed using the selected printer.



The Save as dialog of the operating system is opened.
The report can be saved under any name required. The following name is proposed:
Report_<YYYYMMDD_HHMMSS>.xml
(YYYYMMDD_HHMMSS stands for year, month, day, hour, minute, second).



The current report is deleted.

"SETTINGS" MENU ITEM

NOTE

If setting changes have not yet been saved with [Accept], they can be undone with [Cancel].
Click "Settings" in the menu column to open the menu item.

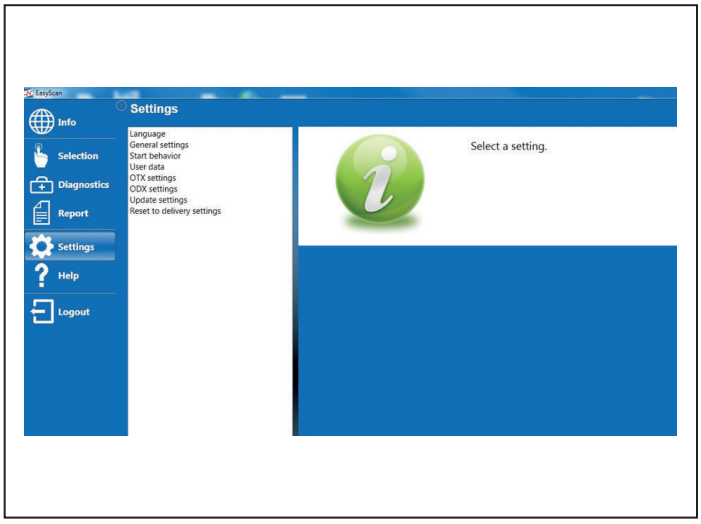

5 BASIC TROUBLESHOOTING AND SERVICE PROCEDURES

EASY SCAN CODING - AS3 D6L HEATER

CONFIGURE CONTROL SENSOR INPUT (EXTERNAL TEMPERATURE SENSOR)

If an external temperature sensor (option iii) is attached to the Grey wire/Pin 5 of XS/XB10 to function as a control sensor input for the air heater, it is essential to reprogram Pin 5 to receive an analogue input from the temperature sensor instead of a set point. To modify this parameter using EasyScan, please follow the steps outlined below.

1) Click on "Diagnostics Menu" in EasyScan Home screen (ensure all heater functions are selected), then select "Coding" submenu.
2) By default, the parameter "External temperature sensor (LEF2)" is preset to "No" in range and format column. Change it to "Yes"and click "Write".
3) See if Actual value column has "Yes" in blue font.
4) Carry out short functional check to see if the heater reads control sensor from external temperature sensor(LEF2) in measured value.

NOTE

- In Easystart Pro, it is necessary to modify the control sensor input from the control unit (EasyStart Pro) to the air heater.
- If an error occurs (i.e. heater mismatch, emergency mode, etc.), please reset the heater and controller by disconnecting and then reconnecting the power supply. If the issue persists, please reach out to Eberspaecher technical support for assistance.

CONFIGURE THE DIGITAL OUTPUT TYPE (PIN 9 OF XS/XB10 CONNECTOR)

This is required when a multi-purpose digital output function wire (Black/Red/Pin 9 of XS/XB10) needs to provide specific type of output signal (see page 38 for output types). In this case, the Pin 9 must be reconfigured by coding the heater via EasyScan using following steps:

1) Click on "Diagnostics Menu" in EasyScan Home screen (ensure all heater functions are selected), then select "Coding" submenu.

2) By default, the parameter "Digital output function" is preset to "Continuous signal ON" in range and format column. Change it to the required signal type and click "Write".

3) See if Actual value column has selected digital output function in blue font.

4) Carry out short functional check to see if the heater shows selected digital output function in measured values.

NOTE

- For details concerning the digital output type and its functions, please see page 38.
- Pin 9 supplies a battery voltage that is activated in a format determined by the chosen ouput signal type during the coding process in Easyscan.

EASYSCAN ERROR

NO COMMUNICATION BETWEEN THE EASYSCAN DIAGNOSTICS TOOL AND THE PC / LAPTOP (Table 5.7):

Error message	Cause	Remedy
E0049	USB connection from the diagnostics interface (VCI) to the PC / laptop is faulty.	Ensure a connection exists between the diagnostics interface and PC / laptop and check in “Windows –> Control Panel –> System and Security -> System -> Device Manager”. If the connection is correct the entry of the diagnostic interface is displayed.
	Diagnostics interface (VCI) is configured incorrectly.	Check the configuration with “Connection Assistant” and “System Configurator”.
	The diagnostics interface (VCI) has a USB 2.0 connection and is connected to a USB 3.0 port of the PC / laptop.	Updating the USB host controller drivers.

NO COMMUNICATION BETWEEN THE EASYSCAN AND THE HEATER CONTROL BOX

Error message	Cause	Remedy
Reading failed	Diagnostics interface (VCI) has no power supply. “VBAT” LED on the diagnostics interface does not light up.	Connecting the power supply. “VBAT” LED on the diagnostics interface must light up green.
	Cable harness connector contact problems with connection to the diagnostics interface (VCI) or control box.	Test connectors for continuity, short circuit and damage.
	Defective heater cable harness.	Check the cable harness cables for continuity, short circuit and damage.
	No or defective terminal resistor.	Attach or replace terminal resistor. The measured resistance between CAN high and CAN low with an interrup-power supply should be approx. 60 Ω (min. 50 Ω / max. 70 Ω).
	CAN high and CAN low are mixed up at the CAN control box.	Check CAN connections and make connections as per circuit diagram.
	Missing terminal 15 voltage for control boxes.	Connect power supply as per circuit diagram.

5 BASIC TROUBLESHOOTING AND SERVICE PROCEDURES

Figure 5.4: ECHO 6 Diagnostic options

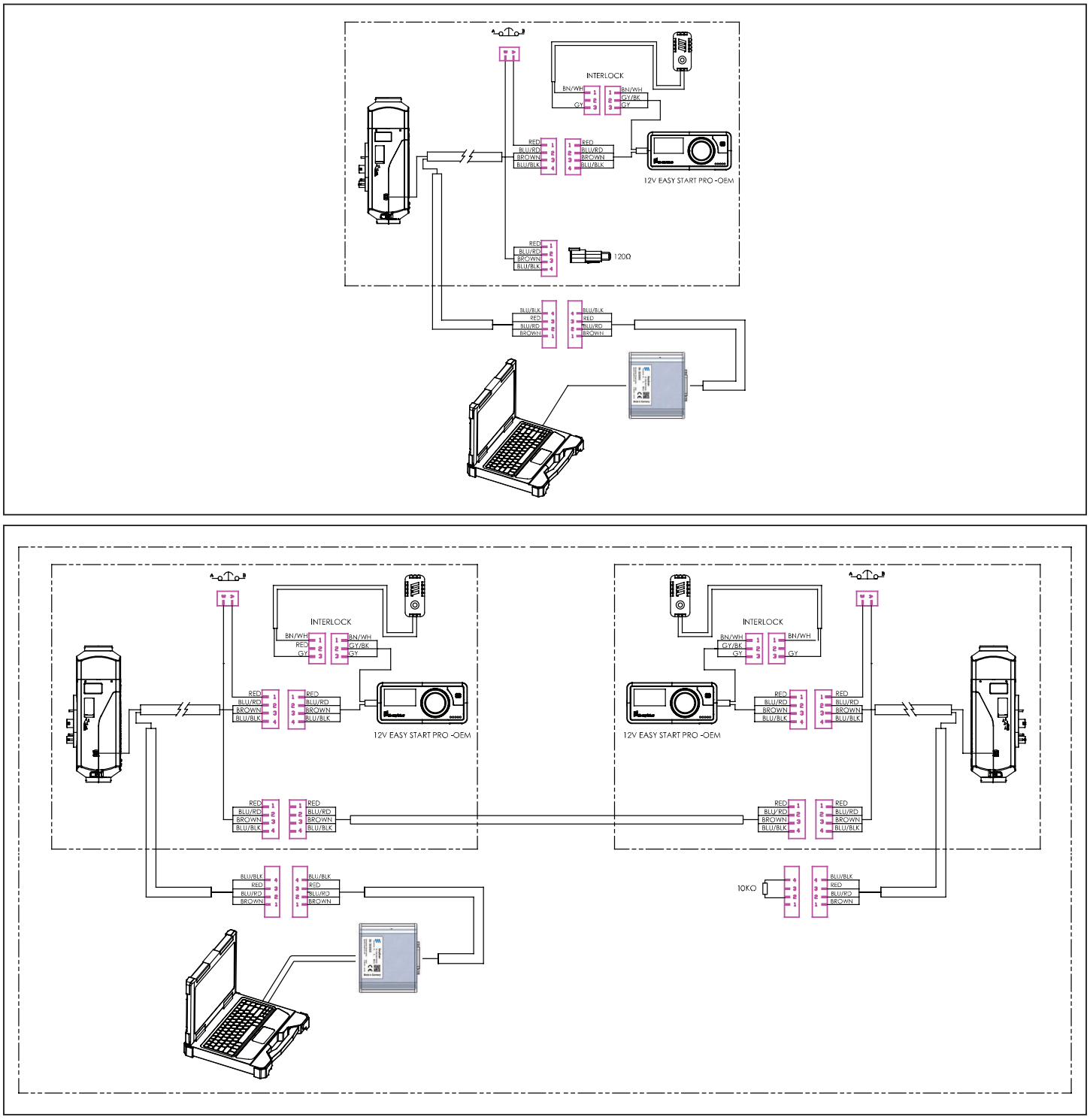

NOTE

- After Easyscan diagnostics is done, Ensure the diagnostic cap with 10 kohm resistors is reattached to the mating diagnostic connector.

For Illustration purpose only

DRAFT #1 – Stand: 02.2025 – NCN Design & Illustration: 02/16/2025

5 BASIC TROUBLESHOOTING AND SERVICE PROCEDURES

FAULT CODES (Table 5.8)

Fault code **P000…** for EasyScan and TP 7.1 (if connected via CAN) **(…)** for TP 7 (LIN)	**Error description**	**Cause** ▪ Remedial action	**Fault class** For TP7.1 control units: ▪ EasyStart Pro
P000100 (071) **P000101** (072) **P000102** (073)	Overheating/air outlet sensor – Interruption – Short circuit – Short circuit to battery (+)	▪ Check overheating sensor. – Check cables for continuity, short circuit and damage. – Unplug connector XB2, measure the resistance between cable BN (chamber 3) and cable WH (chamber 6). – Measured values see page 56, in case of deviating values –> replace temperature sensor.	**1**: Service
P000110 (087) **P000111** (088) **P000112** (089)	Air inlet sensor – Interruption – Short circuit – Short circuit to battery (+)	▪ Check the air inlet sensor for damage – in case of visible damage –> replace the temperature sensor – Unplug connector XB2, measure the resistance between cable BK (chamber 1) and BK (chamber 4) – For measured values - see page 56 ▪ Delete fault memory. – If the error continues to be displayed –> replace the temperature sensor.	**1**: Service
P00010A (051)	Cold blowing – Timeout	The combustion chamber has not cooled sufficiently for a restart. ▪ Check whether hot combustion air is drawn in. If no –> check flame sensor, see Fault code P000120 (064) and Fault code P000121 (065)	**1**: Service
P000114 (014)	Possible risk of overheating (implausible signal) **Note!** Fault code P000114 (014) is displayed only if ▪ the heater is in operation ▪ Temperature reached at overheating sensor at least 80 °C.	Temperature difference between the flame and overheating sensor is too large. ▪ For remedial action, see Fault code P000115 (012). ▪ Check flame sensor. – Unplug connector XB2, measure the resistance between cable BU (chamber 2) and cable BN (chamber 3). – Measured values see page 56, in case of deviating values –> replace temperature sensor.	**1**: Service
P000115 (012)	Overheating – Software threshold exceeded	▪ Check air throughput ▪ Check overheating sensor – Check cables for continuity, short circuit and damage. – Unplug connector XB2, measure the resistance between cable BN (chamber 3) and cable WH (chamber 6). – Measured values see page 56, in case of deviating values –> replace temperature sensor.	**5**: Air system or air outlet
P000116 (017)	Overheating – Hardware threshold exceeded	Temperature at overheating sensor >150 °C ▪ For remedial action, see Fault code P000115 (012). ▪ Check overheating sensor. – Check cables for continuity, short circuit and damage. – Unplug connector XB2, measure the resistance between cable BN (chamber 3) and cable WH (chamber 6). – Measured values see page 56, in case of deviating values –> replace temperature sensor.	**5**: Air system or air outlet
P00011A (015)	Operating lock-out – too many overheating events detected	The control box is locked due to too frequent consecutive overheating (Fault code P000114 (014), Fault code P000115 (012)). ▪ For remedial action, see Fault code P000114 (014), Fault code P000115 (012). ▪ Unlock control box. **Note!** In some cases, the heater can be unlocked by following steps: ▪ - Switching ON ▪ - Remove fuse within 20 sec ▪ - Reinsert fuse after around 5 secs ▪ - Restart the heater again.	**6**: Overheating, heater is blocked

DRAFT #1 – Stand: 02.2025 – NCN Design & Illustration: 02/16/2025

5 BASIC TROUBLESHOOTING AND SERVICE PROCEDURES

FAULT CODES (Table 5.8)

Fault code **P000…** for EasyScan and TP 7.1 (if connected via CAN) **(…)** for TP 7 (LIN)	**Error description**	**Cause** ▪ Remedial action	**Fault class** For TP7.1 control units: ▪ EasyStart Pro
P000100 (071) **P000101** (072) **P000102** (073)	Overheating/air outlet sensor – Interruption – Short circuit – Short circuit to battery (+)	▪ Check overheating sensor. – Check cables for continuity, short circuit and damage. – Unplug connector XB2, measure the resistance between cable BN (chamber 3) and cable WH (chamber 6). – Measured values see page 56, in case of deviating values –> replace temperature sensor.	**1**: Service
P000110 (087) **P000111** (088) **P000112** (089)	Air inlet sensor – Interruption – Short circuit – Short circuit to battery (+)	▪ Check the air inlet sensor for damage – in case of visible damage –> replace the temperature sensor – Unplug connector XB2, measure the resistance between cable BK (chamber 1) and BK (chamber 4) – For measured values - see page 56 ▪ Delete fault memory. – If the error continues to be displayed –> replace the temperature sensor.	**1**: Service
P00010A (051)	Cold blowing – Timeout	The combustion chamber has not cooled sufficiently for a restart. ▪ Check whether hot combustion air is drawn in. If no –> check flame sensor, see Fault code P000120 (064) and Fault code P000121 (065)	**1**: Service
P000114 (014)	Possible risk of overheating (implausible signal) **Note!** Fault code P000114 (014) is displayed only if ▪ the heater is in operation ▪ Temperature reached at overheating sensor at least 80 °C.	Temperature difference between the flame and overheating sensor is too large. ▪ For remedial action, see Fault code P000115 (012). ▪ Check flame sensor. – Unplug connector XB2, measure the resistance between cable BU (chamber 2) and cable BN (chamber 3). – Measured values see page 56, in case of deviating values –> replace temperature sensor.	**1**: Service
P000115 (012)	Overheating – Software threshold exceeded	▪ Check air throughput ▪ Check overheating sensor – Check cables for continuity, short circuit and damage. – Unplug connector XB2, measure the resistance between cable BN (chamber 3) and cable WH (chamber 6). – Measured values see page 56, in case of deviating values –> replace temperature sensor.	**5**: Air system or air outlet
P000116 (017)	Overheating – Hardware threshold exceeded	Temperature at overheating sensor >150 °C ▪ For remedial action, see Fault code P000115 (012). ▪ Check overheating sensor. – Check cables for continuity, short circuit and damage. – Unplug connector XB2, measure the resistance between cable BN (chamber 3) and cable WH (chamber 6). – Measured values see page 56, in case of deviating values –> replace temperature sensor.	**5**: Air system or air outlet
P00011A (015)	Operating lock-out – too many overheating events detected	The control box is locked due to too frequent consecutive overheating (Fault code P000114 (014), Fault code P000115 (012)). ▪ For remedial action, see Fault code P000114 (014), Fault code P000115 (012). ▪ Unlock control box. **Note!** In some cases, the heater can be unlocked by following steps: ▪ - Switching ON ▪ - Remove fuse within 20 sec ▪ - Reinsert fuse after around 5 secs ▪ - Restart the heater again.	**6**: Overheating, heater is blocked

DRAFT #1 – Stand: 02.2025 – NCN Design & Illustration: 02/16/2025

5 BASIC TROUBLESHOOTING AND SERVICE PROCEDURES

FAULT CODES (Table 5.8)

Fault code **P000…** for EasyScan and TP 7.1 (if connected via CAN) **(…)** for TP 7 (LIN)	**Error description**	**Cause** ▪ Remedial action	**Fault class** For TP7.1 control units: ▪ EasyStart Pro
P000100 (071) **P000101** (072) **P000102** (073)	Overheating/air outlet sensor – Interruption – Short circuit – Short circuit to battery (+)	▪ Check overheating sensor. – Check cables for continuity, short circuit and damage. – Unplug connector XB2, measure the resistance between cable BN (chamber 3) and cable WH (chamber 6). – Measured values see page 56, in case of deviating values –> replace temperature sensor.	**1**: Service
P000110 (087) **P000111** (088) **P000112** (089)	Air inlet sensor – Interruption – Short circuit – Short circuit to battery (+)	▪ Check the air inlet sensor for damage – in case of visible damage –> replace the temperature sensor – Unplug connector XB2, measure the resistance between cable BK (chamber 1) and BK (chamber 4) – For measured values - see page 56 ▪ Delete fault memory. – If the error continues to be displayed –> replace the temperature sensor.	**1**: Service
P00010A (051)	Cold blowing – Timeout	The combustion chamber has not cooled sufficiently for a restart. ▪ Check whether hot combustion air is drawn in. If no –> check flame sensor, see Fault code P000120 (064) and Fault code P000121 (065)	**1**: Service
P000114 (014)	Possible risk of overheating (implausible signal) **Note!** Fault code P000114 (014) is displayed only if ▪ the heater is in operation ▪ Temperature reached at overheating sensor at least 80 °C.	Temperature difference between the flame and overheating sensor is too large. ▪ For remedial action, see Fault code P000115 (012). ▪ Check flame sensor. – Unplug connector XB2, measure the resistance between cable BU (chamber 2) and cable BN (chamber 3). – Measured values see page 56, in case of deviating values –> replace temperature sensor.	**1**: Service
P000115 (012)	Overheating – Software threshold exceeded	▪ Check air throughput ▪ Check overheating sensor – Check cables for continuity, short circuit and damage. – Unplug connector XB2, measure the resistance between cable BN (chamber 3) and cable WH (chamber 6). – Measured values see page 56, in case of deviating values –> replace temperature sensor.	**5**: Air system or air outlet
P000116 (017)	Overheating – Hardware threshold exceeded	Temperature at overheating sensor >150 °C ▪ For remedial action, see Fault code P000115 (012). ▪ Check overheating sensor. – Check cables for continuity, short circuit and damage. – Unplug connector XB2, measure the resistance between cable BN (chamber 3) and cable WH (chamber 6). – Measured values see page 56, in case of deviating values –> replace temperature sensor.	**5**: Air system or air outlet
P00011A (015)	Operating lock-out – too many overheating events detected	The control box is locked due to too frequent consecutive overheating (Fault code P000114 (014), Fault code P000115 (012)). ▪ For remedial action, see Fault code P000114 (014), Fault code P000115 (012). ▪ Unlock control box. **Note!** In some cases, the heater can be unlocked by following steps: ▪ - Switching ON ▪ - Remove fuse within 20 sec ▪ - Reinsert fuse after around 5 secs ▪ - Restart the heater again.	**6**: Overheating, heater is blocked

DRAFT #1 – Stand: 02.2025 – NCN Design & Illustration: 02/16/2025

5 BASIC TROUBLESHOOTING AND SERVICE PROCEDURES

FAULT CODES (Table 5.8)

Fault code **P000…** for EasyScan and TP 7.1 (if connected via CAN) **(…)** for TP 7 (LIN)	**Error description**	**Cause** ▪ Remedial action	**Fault class** For TP7.1 control units: ▪ EasyStart Pro
P000100 (071) **P000101** (072) **P000102** (073)	Overheating/air outlet sensor – Interruption – Short circuit – Short circuit to battery (+)	▪ Check overheating sensor. – Check cables for continuity, short circuit and damage. – Unplug connector XB2, measure the resistance between cable BN (chamber 3) and cable WH (chamber 6). – Measured values see page 56, in case of deviating values –> replace temperature sensor.	**1**: Service
P000110 (087) **P000111** (088) **P000112** (089)	Air inlet sensor – Interruption – Short circuit – Short circuit to battery (+)	▪ Check the air inlet sensor for damage – in case of visible damage –> replace the temperature sensor – Unplug connector XB2, measure the resistance between cable BK (chamber 1) and BK (chamber 4) – For measured values - see page 56 ▪ Delete fault memory. – If the error continues to be displayed –> replace the temperature sensor.	**1**: Service
P00010A (051)	Cold blowing – Timeout	The combustion chamber has not cooled sufficiently for a restart. ▪ Check whether hot combustion air is drawn in. If no –> check flame sensor, see Fault code P000120 (064) and Fault code P000121 (065)	**1**: Service
P000114 (014)	Possible risk of overheating (implausible signal) **Note!** Fault code P000114 (014) is displayed only if ▪ the heater is in operation ▪ Temperature reached at overheating sensor at least 80 °C.	Temperature difference between the flame and overheating sensor is too large. ▪ For remedial action, see Fault code P000115 (012). ▪ Check flame sensor. – Unplug connector XB2, measure the resistance between cable BU (chamber 2) and cable BN (chamber 3). – Measured values see page 56, in case of deviating values –> replace temperature sensor.	**1**: Service
P000115 (012)	Overheating – Software threshold exceeded	▪ Check air throughput ▪ Check overheating sensor – Check cables for continuity, short circuit and damage. – Unplug connector XB2, measure the resistance between cable BN (chamber 3) and cable WH (chamber 6). – Measured values see page 56, in case of deviating values –> replace temperature sensor.	**5**: Air system or air outlet
P000116 (017)	Overheating – Hardware threshold exceeded	Temperature at overheating sensor >150 °C ▪ For remedial action, see Fault code P000115 (012). ▪ Check overheating sensor. – Check cables for continuity, short circuit and damage. – Unplug connector XB2, measure the resistance between cable BN (chamber 3) and cable WH (chamber 6). – Measured values see page 56, in case of deviating values –> replace temperature sensor.	**5**: Air system or air outlet
P00011A (015)	Operating lock-out – too many overheating events detected	The control box is locked due to too frequent consecutive overheating (Fault code P000114 (014), Fault code P000115 (012)). ▪ For remedial action, see Fault code P000114 (014), Fault code P000115 (012). ▪ Unlock control box. **Note!** In some cases, the heater can be unlocked by following steps: ▪ - Switching ON ▪ - Remove fuse within 20 sec ▪ - Reinsert fuse after around 5 secs ▪ - Restart the heater again.	**6**: Overheating, heater is blocked

DRAFT #1 – Stand: 02.2025 – NCN Design & Illustration: 02/16/2025

5 BASIC TROUBLESHOOTING AND SERVICE PROCEDURES

FAULT CODES (Table 5.8)

Fault code **P000…** for EasyScan and TP 7.1 (if connected via CAN) **(…)** for TP 7 (LIN)	**Error description**	**Cause** ▪ Remedial action	**Fault class** For TP7.1 control units: ▪ EasyStart Pro
P000100 (071) **P000101** (072) **P000102** (073)	Overheating/air outlet sensor – Interruption – Short circuit – Short circuit to battery (+)	▪ Check overheating sensor. – Check cables for continuity, short circuit and damage. – Unplug connector XB2, measure the resistance between cable BN (chamber 3) and cable WH (chamber 6). – Measured values see page 56, in case of deviating values –> replace temperature sensor.	**1**: Service
P000110 (087) **P000111** (088) **P000112** (089)	Air inlet sensor – Interruption – Short circuit – Short circuit to battery (+)	▪ Check the air inlet sensor for damage – in case of visible damage –> replace the temperature sensor – Unplug connector XB2, measure the resistance between cable BK (chamber 1) and BK (chamber 4) – For measured values - see page 56 ▪ Delete fault memory. – If the error continues to be displayed –> replace the temperature sensor.	**1**: Service
P00010A (051)	Cold blowing – Timeout	The combustion chamber has not cooled sufficiently for a restart. ▪ Check whether hot combustion air is drawn in. If no –> check flame sensor, see Fault code P000120 (064) and Fault code P000121 (065)	**1**: Service
P000114 (014)	Possible risk of overheating (implausible signal) **Note!** Fault code P000114 (014) is displayed only if ▪ the heater is in operation ▪ Temperature reached at overheating sensor at least 80 °C.	Temperature difference between the flame and overheating sensor is too large. ▪ For remedial action, see Fault code P000115 (012). ▪ Check flame sensor. – Unplug connector XB2, measure the resistance between cable BU (chamber 2) and cable BN (chamber 3). – Measured values see page 56, in case of deviating values –> replace temperature sensor.	**1**: Service
P000115 (012)	Overheating – Software threshold exceeded	▪ Check air throughput ▪ Check overheating sensor – Check cables for continuity, short circuit and damage. – Unplug connector XB2, measure the resistance between cable BN (chamber 3) and cable WH (chamber 6). – Measured values see page 56, in case of deviating values –> replace temperature sensor.	**5**: Air system or air outlet
P000116 (017)	Overheating – Hardware threshold exceeded	Temperature at overheating sensor >150 °C ▪ For remedial action, see Fault code P000115 (012). ▪ Check overheating sensor. – Check cables for continuity, short circuit and damage. – Unplug connector XB2, measure the resistance between cable BN (chamber 3) and cable WH (chamber 6). – Measured values see page 56, in case of deviating values –> replace temperature sensor.	**5**: Air system or air outlet
P00011A (015)	Operating lock-out – too many overheating events detected	The control box is locked due to too frequent consecutive overheating (Fault code P000114 (014), Fault code P000115 (012)). ▪ For remedial action, see Fault code P000114 (014), Fault code P000115 (012). ▪ Unlock control box. **Note!** In some cases, the heater can be unlocked by following steps: ▪ - Switching ON ▪ - Remove fuse within 20 sec ▪ - Reinsert fuse after around 5 secs ▪ - Restart the heater again.	**6**: Overheating, heater is blocked

5 BASIC TROUBLESHOOTING AND SERVICE PROCEDURES

FAULT CODES (Table 5.8)

Fault code **P000…** for EasyScan and TP 7.1 (if connected via CAN) **(…)** for TP 7 (LIN)	**Error description**	**Cause** ▪ Remedial action	**Fault class** For TP7.1 control units: ▪ EasyStart Pro
P000100 (071) **P000101** (072) **P000102** (073)	Overheating/air outlet sensor – Interruption – Short circuit – Short circuit to battery (+)	▪ Check overheating sensor. – Check cables for continuity, short circuit and damage. – Unplug connector XB2, measure the resistance between cable BN (chamber 3) and cable WH (chamber 6). – Measured values see page 56, in case of deviating values –> replace temperature sensor.	**1**: Service
P000110 (087) **P000111** (088) **P000112** (089)	Air inlet sensor – Interruption – Short circuit – Short circuit to battery (+)	▪ Check the air inlet sensor for damage – in case of visible damage –> replace the temperature sensor – Unplug connector XB2, measure the resistance between cable BK (chamber 1) and BK (chamber 4) – For measured values - see page 56 ▪ Delete fault memory. – If the error continues to be displayed –> replace the temperature sensor.	**1**: Service

NOTE
If the fan motor or controller is defective, it is necessary to check the number of hours run and, if possible, the number of ignitions.

MEASURING THE FUEL QUANTITY WITH EASYSCAN

Figure 5.7: Fuel quantity range

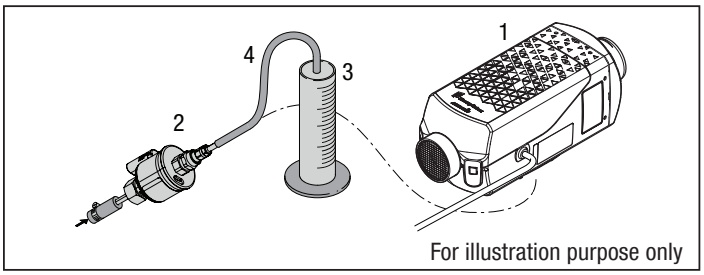

For illustration purpose only

TABLE OF VALUES (Table 5.9)

Heater	Fuel	Fuel quantity		
		Nominal	Minimum	Maximum
AXL D6L	diesel	12.4 mL	11.2 mL	13.6 mL

NOTE
For Fuel quantity test, heater must be turned off prior to repeat start after approx. 120 sec.

CHECKING THE FUEL SUPPLY
Before measuring the fuel quantity, check the following points in the fuel supply.
- If necessary, check the strainer in the metering pump.
- Check the laying of the fuel pipes.
- Check fuel pipes for leaks.
- Check the hose connections for leaks and repair if necessary.
- Is the fuel removal installed according to the details in the technical description?

FUEL QUANTITY TEST

- Pull off the fuel pipe at the heater and discharge the fuel into a measuring cylinder (volume > 25 cm3).
- Make the connection between the heater and EasyScan diagnostic interface VCI. To do this, connect the EasyScan to the diagnostics connector or the cable harness.
- Start the EasyScan diagnostic software.
- In the “Diagnosis” menu, open the (Components) tab.
- Call up the (Select function) submenu.
- Enter this test parameter in the [Parameter] menu:
  – Frequency: 7 Hz
  – Duration. 60 seconds
- Press the [Start] button to start the measurement.
- Wait until the measurement process has ended, then read off the pumped quantity of fuel in the measuring centre.
  If the measured quantity of fuel lies outside the values listed in the table, the metering pump must be replaced.

NOTE
The purely manual measurement of the fuel delivery rate has too many uncertainty factors to supply reliable results. Ambient factors influence the manually determined delivery rates significantly: battery voltage, reference altitude above seal level, room temperature, etc.
→ Eberspächer recommends use of EasyScan to achieve the most deviation-free measurement possible.

DRAFT #1 – Stand: 02.2025 – NCN Design & Illustration: 02/16/2025

5 BASIC TROUBLESHOOTING AND SERVICE PROCEDURES

TESTING THE OVERHEATING SENSOR (Table 5.10)
Carry out step 5.4.1 to step 5.4.9.

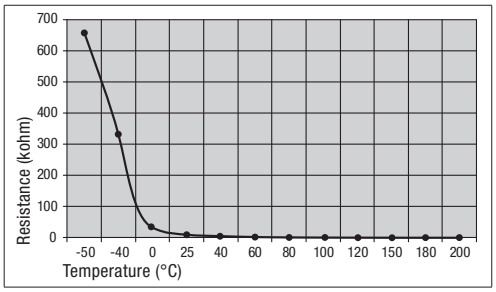

To test the overheating sensor, measure the resistance in chambers 3 and 6 in connector -XB2.

TABLE OF OVERHEATING SENSOR VALUES

Temperature °C	Resistance kΩ	
	min.	max.
– 50	577.00	737.00
– 40	297.60	363.60
0	30.35	34.75
25	9.50	10.50
40	5.01	5.65
60	2.315	2.665
80	1.16	1.36
100	0.617	0.737
120	0.351	0.427
150	0.163	0.203
180	0.083	0.107
200	0.056	0.072

CHECK FLAME SENSOR (Table 5.11)
To test the flame sensor, measure the resistance in chambers 2 and 3 in connector -XB2.

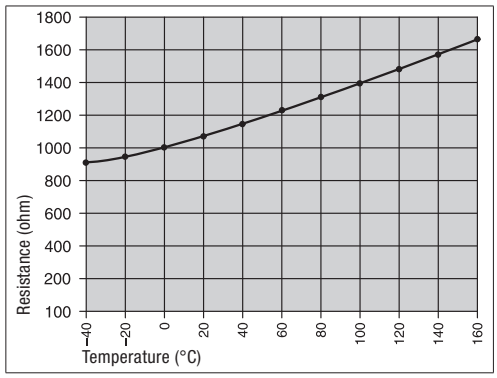

TABLE OF FLAME SENSOR VALUES

Temperature °C	Resistance Ω		
	Setpoint	min.	max.
– 40	843	826	860
– 20	922	903	940
0	1000	980	1020
20	1078	1056	1100
40	1155	1132	1179.5
60	1232	1208	1257
80	1309	1283	1335
100	1385	1357	1413
120	1461	1432	1490
140	1536	1505	1567
160	1611	1578	1643

TEST THE AIR INLET SENSOR (Table 5.12)

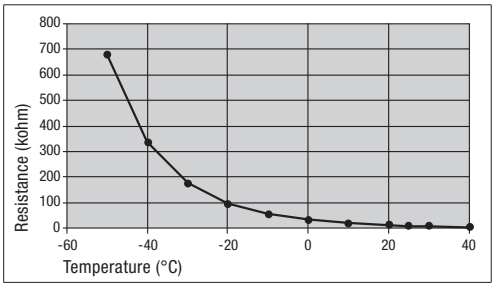

To test the air inlet sensor, measure the resistance in chambers 1 and 4 in connector -XB2.

TABLE OF VALUES - AIR INLET SENSOR

Temperature °C	Resistance kΩ		
	Setpoint	min.	max.
– 50	678	643	714
– 40	337	322	353
– 30	177	170	184
– 20	97	94	100
– 10	55	54	57
0	33	32	33
10	20	20	20
20	13	12	13
25	10	10	10
30	8	8	8
40	5	5	5

CHECKING THE "EXTERNAL" TEMPERATURE SENSOR (Table 5.13)
The "external" temperature sensor must be checked using a digital multimeter. Replace the temperature sensor if the resistance value is not the same as the curve in the diagram or the table of values.

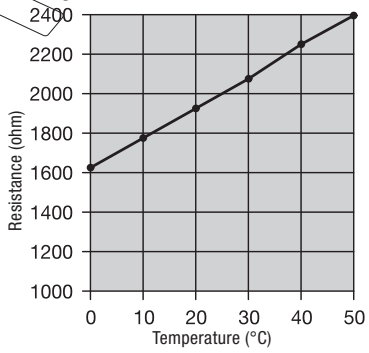

TABLE OF VALUES – "EXTERNAL" TEMPERATURE SENSOR

Temperature °C	Resistance Ω	
	min.	max.
0	1600	1660
5	1670	1730
10	1745	1800
15	1820	1870
20	1895	1950
25	1970	2030
30	2050	2110
35	2130	2190
40	2210	2280
45	2295	2370

6 PARTS LIST

Figure 6.2 : SPARE PARTS DIAGRAM - 12V AL3 D6L HEATER

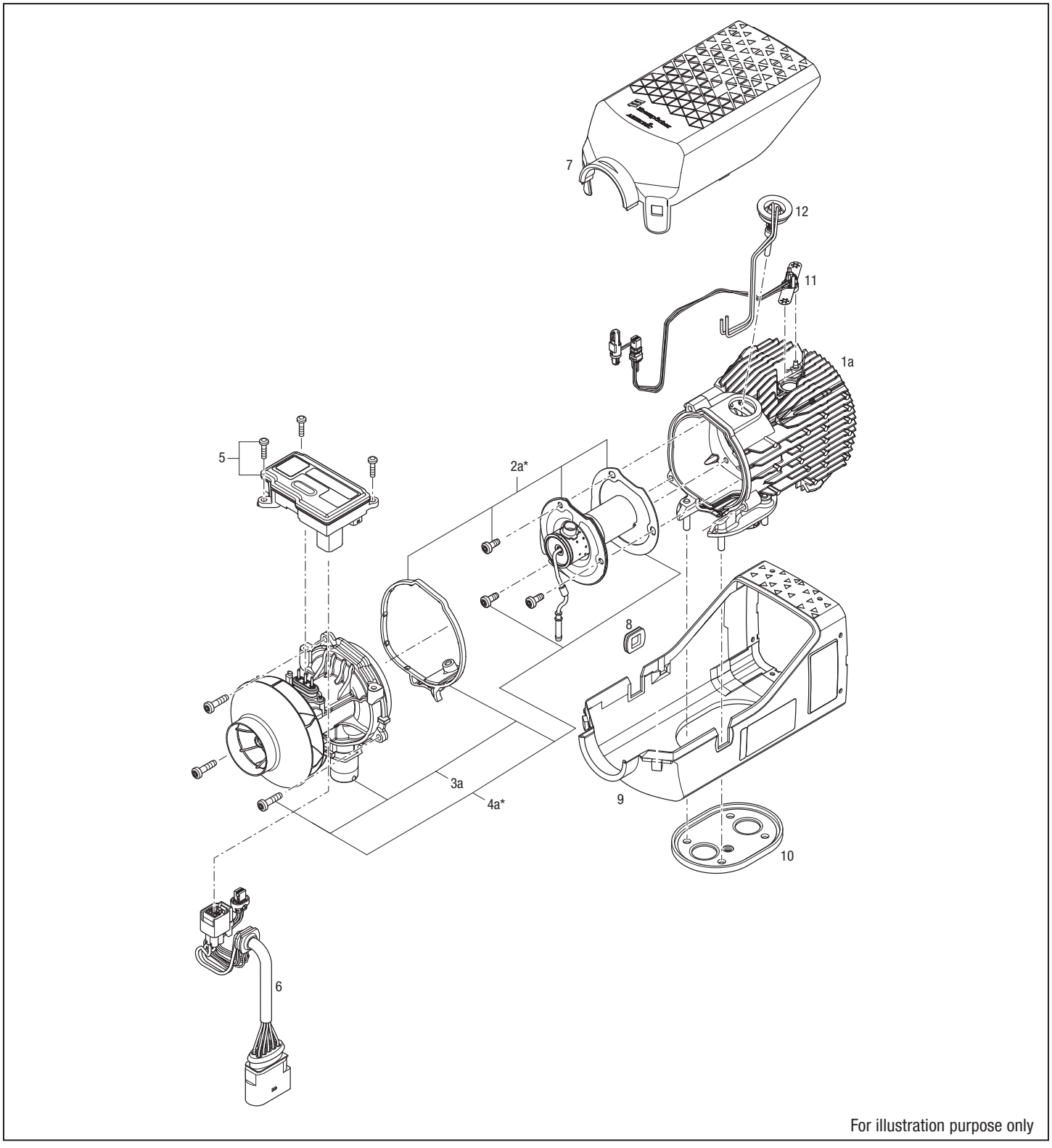

For illustration purpose only

6 PARTS LIST

Figure 6.2 : SPARE PARTS DIAGRAM - 12V AL3 D6L HEATER

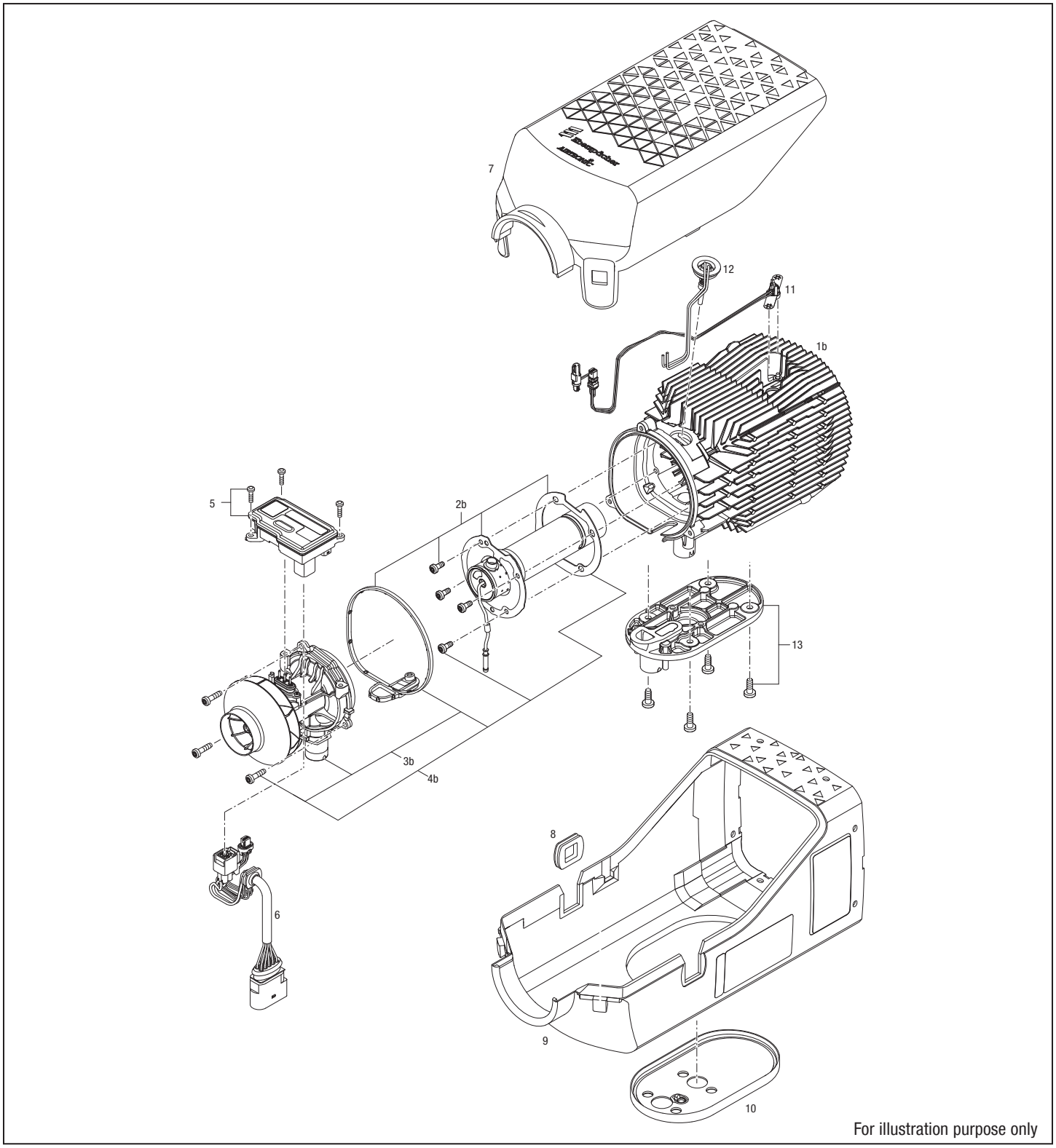

For illustration purpose only

6 PARTS LIST

SPARE PARTS LIST - 12V AL3 D6L (Table 6.1)

Item No.	Quantity per unit	Quantity per SU	Designation	Order No. (SU)	For unit 25.2957.05 D4R, 12 V	25.2958.05 D4R, 24 V	25.2959.05 D6L, 12 V	25.2960.05 D6L, 24 V	20.2031.05 B4R, 12 V
1a	1	1	Heat exchanger incl. screws, and thermal separation combustion chamber	25.2955.99.0601	•	•			•
1b				25.2959.99.0601			•	•	
2a	1	1	Combustion chamber incl. screws, blower seal, and thermal separation combustion chamber	20.2030.99.1000					•
				25.2955.99.1000	•	•			
2b				25.2959.99.1000			•	•	
3a	1	1	Blower 12 V incl. screws and blower seal	25.2957.99.1500	•				•
3b				25.2959.99.1500			•		
3a			Blower 24 V incl. screws and blower seal	25.2958.99.1500		•			
3b				25.2960.99.1500				•	
4a	1	1	Blower seal incl. blower screws, srews for combustion chamber and thermal separation combustion chamber	25.2955.99.0603	•	•			•
4b				25.2959.99.0603			•	•	
5	1	1	Control box 12 V incl. screws	20.2031.99.5000					•
				25.2957.99.5000	•				
				25.2959.99.5000			•		
			Control box 24 V incl. screws	25.2958.99.5000		•			
				25.2960.99.5000				•	
6	1	1	Cable harness heater	25.2953.99.0102	•	•			•
				25.2959.99.0102			•	•	
7	1	1	Jacket shell, top	25.2955.01.0101	•	•			•
				25.2959.01.0101			•	•	
8	1	1	Grommet, cable outlet	25.2069.00.0001	•	•	•	•	•
9	1	1	Jacket shell, bottom	25.2955.01.0102	•	•			•
				25.2959.01.0102			•	•	
10	1	1	Seal, flange	25.2953.01.0003	•	•			•
				25.2959.01.0003			•	•	
11	1	1	Combination sensor (incl. air inlet sensor and installation tool)	25.2953.99.4000	•	•			•
				25.2959.99.4000			•	•	
12	1	1 V	Glow plug with grommet 12 V	20.2029.99.0104	•		•		•
			24 V	25.2954.99.0104		•		•	
13	1	1	Heat exchanger base, flange plate incl. screws	25.2959.99.0104			•	•	

6 PARTS LIST

Figure 6.3 : SPARE PARTS DIAGRAM - CARGO 6 Kit

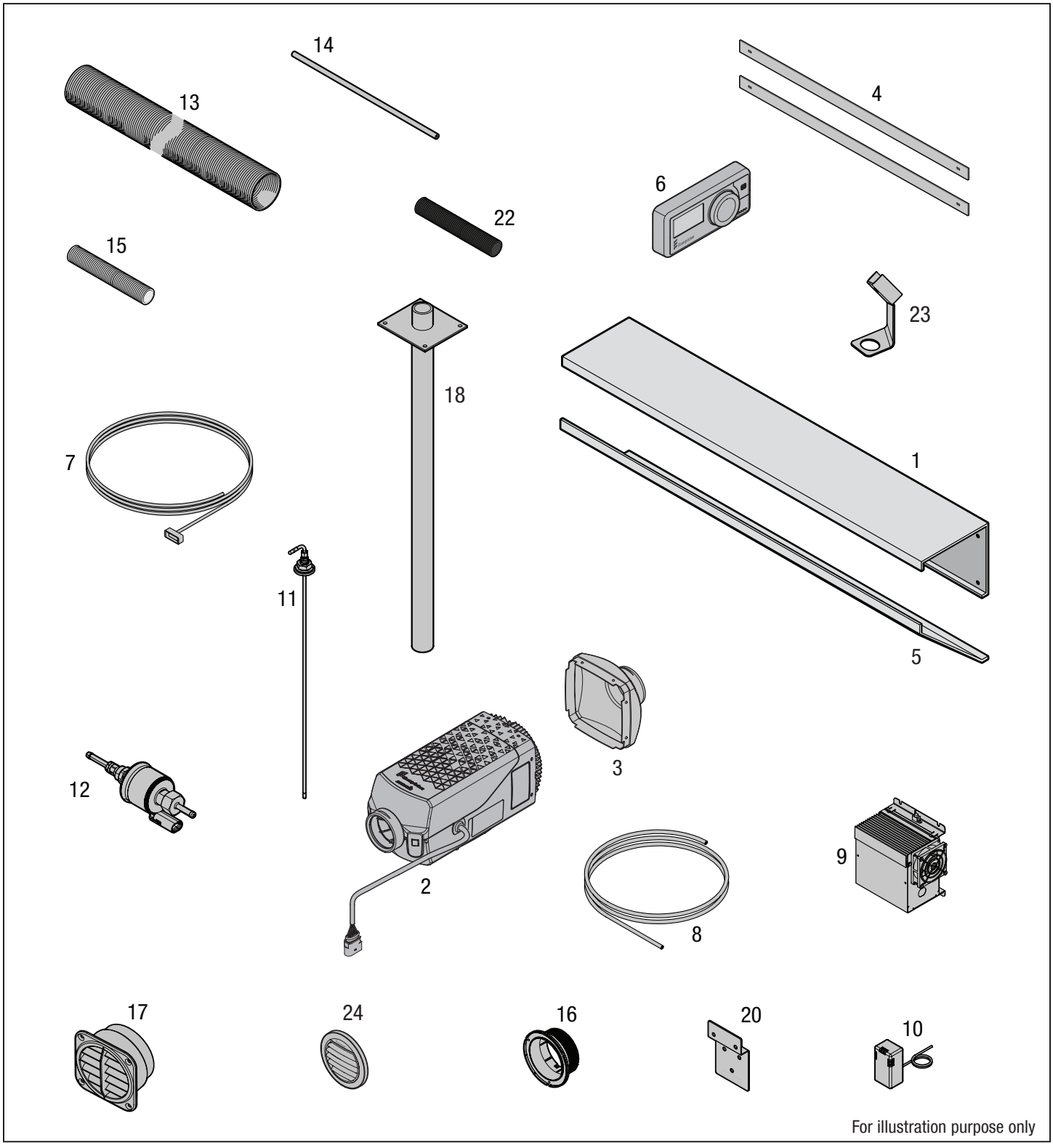

6 PARTS LIST

SPARE PARTS LIST - ECK KIT (Table 6.2)

Item No.	Quantity	Designation	Order No.	For unit	20 2829 59 04 61	20 2829 59 04 62
1	1	CARGO 6 Mounting Bracket (Wall mounted)	20 2900 40 0601		•	•
2	1	12V AX3 D6L Heater	25 2959 05 0000		•	
3	1	AS3 D6L Heater Hood 90 mm	22 1000 01 0086		•	•
4	2	CARGO 6 Enclosure Mounting bracket	20 2900 40 0603		•	•
5	1	CARGO 6 Mounting Bracket - Lid	20 2900 40 0601		•	•
6	1	EasyStart PRO Controller with Adapter Cable - Control branch	20 2800 70 2200		•	•
7	1	CARGO 6 Harness (8 m)	20 2900 70 0805		•	•
8	1	Plastic Fuel Line 2 mm ID 4 mm OD/mtr	890 31 055		•	•
9	1	Power converter assembly (110V AC - 12V)	20 2900 70 0172		•	•
10	1	Temp Sensor External	25 1774 89 0300		•	•
11	1	Fuel Pick Up Pipe 2 mm with 1/4” NPT	20 2900 20 2010		•	•
12	1	Fuel Metering Pump AX3 D6L 12V	22 4550 05 0000		•	•
13	1	Flex Air Hose	10 2114 38 0000		•	•
14	1	Fuel Adapter (3.5 to 4.5 mm ID) for Ax3 Heaters	25 2635 05 0007		•	•
15	1	Exhaust pipe 24 x 750 mm w/end cap	25 2800 30 0750		•	•
16	1	Reduction Hood 90 mm (D6L)	22 1000 01 0086		•	•
17	2	Adjustable Grill / Flanged 90/100 mm	20 1609 80 0900		•	•
18	1	Exhaust pipe assembly with plate	20 2900 30 0016		•	•
19	1	CARGO 6 Kit FMP Cover Box	20 2900 40 0500		•	•
20	1	FMP Rubber Adapter/Holder	22 1000 50 0300		•	•
21	1	Bag part - CARGO 6 Hardware	20 2800 00 0191		•	•
22	1	25 mm Air Intake Tube	360 00 006		•	•
23	1	Exhaust pipe assambly with plate	20 2900 30 0016		•	•
24	1	0° Outlet Screen (Flat) (For 75/90mm flange)	22 1000 01 00 48		•	•

6 PARTS LIST

Figure 6.3 : SPARE PARTS DIAGRAM- ECHO 6 DUCT SYSTEM

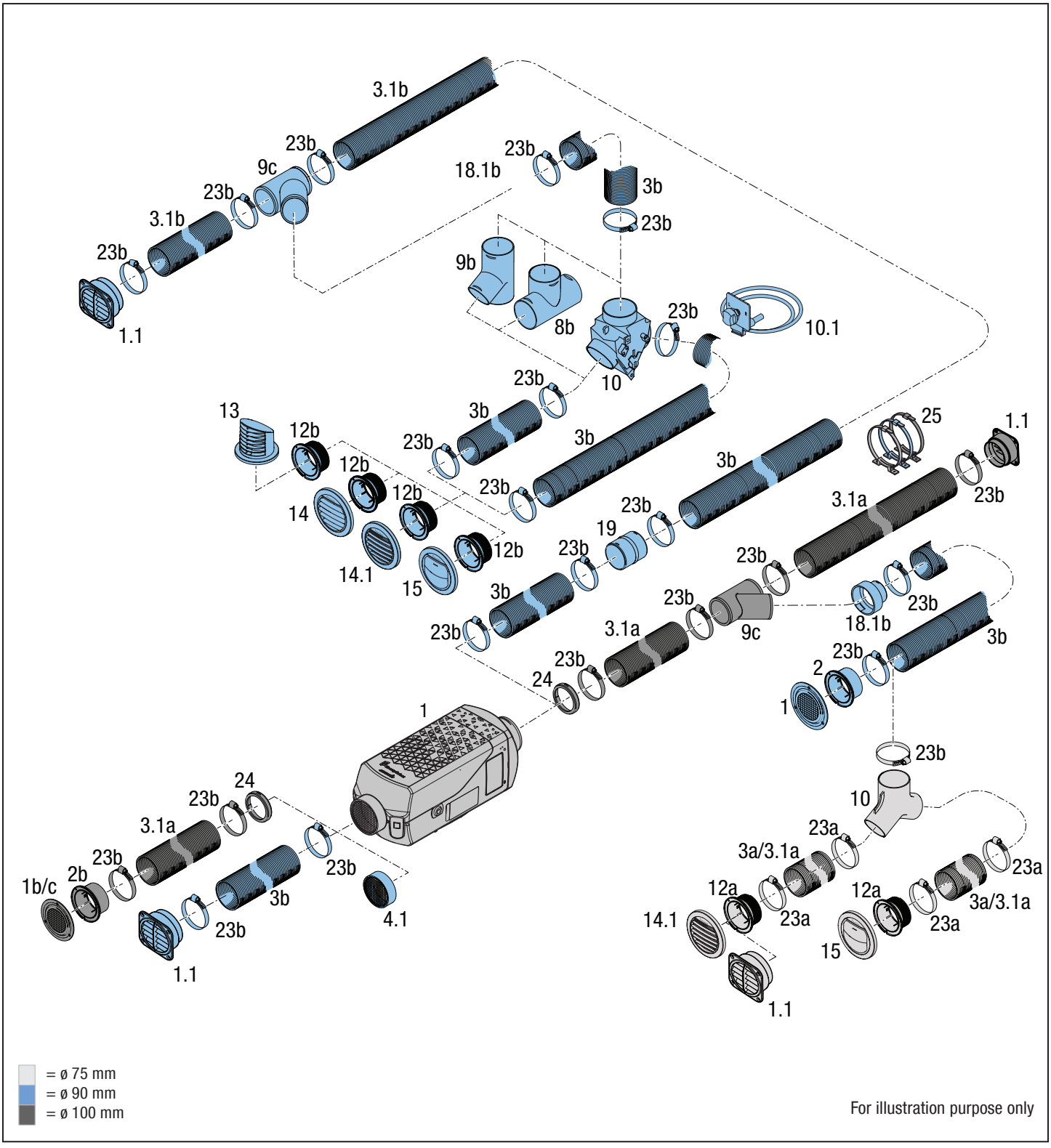

6 PARTS LIST

SPARE PARTS LIST - ECH DUCT SYSTEM (Table 6.3)

DESCRIPTION & PART #'S

Item No.	Description	Specification	item No. (Fig 6.3)	Part Number	Model # B/D V
1	Grill (Inlet & Outlet)	90 mm (3.5")	1a	20 1465 89 05 00	•
		140 mm (5.25")	1b	25 1729 89 00 05	•
		Nickel Plated Open Screen, 140 mm (5.25")	1c	25 1226 89 05 00	•
1.1	Rotatable Grill (Outlet vent with flange)	90/100 mm (3.5/4")	1d	20 1609 80 0900	•
1.2	Rotatable Grill (Outlet vent with flange)	75/100 mm (3.0/4")	1e	22 1050 89 2100	•
2	Ducting Flange (Connecting Socket)	for Duct Size 90 mm (3.5")	2a	20 1297 00 00 01	•
		for Duct Size 100 mm (4")	2b	25 1226 89 00 40	•
3	Flexible Air Hose (aluminum, paper, plastic)	di = 75mm (3.0")	3a	10 2114 34 00 00	•
3a		di = 90mm (3.5")	3b	10 2114 37 00 00	•
3.1a	Flexible Hose	di = 75 mm or 3.0"	3.1a	5550007	•
3.1b		di = 100 mm or 4.0"	3.1b	5550008	•
4.1	Protective Grill (Heater)	d = 100 mm (2.4")		25 1226 89 44 00	•
8	Plastic "T" Piece	d = 75 mm (3.0")	8a	22 1000 01 00 27	•
		d = 90 mm (3.5")	8b	22 1000 01 00 26	•
9	45° Plastic "Y" Connector	d = 75 mm or 3", L = 175 mm	9a	25 1226 89 00 44	•
		d = 100 mm or 4", L = 230 mm	9b	25 1226 89 00 45	•
		d = 90 mm or 3.5", L = 180 mm	9c	22 1000 01 00 21	•
9.1	Symmetrical "Y" Piece	Metal, D = 75 mm, d =50 mm	9.1a	25 1482 80 08 00	•
		Plastic, D = 75 mm, d =60 mm	9.1b	22 1000 01 00 82	•
		Plastic, D = 90 mm, d =60 mm	9.1c	22 1000 01 00 83	•
		Plastic, D = 90 mm, d =75 mm	9.1d	22 1000 01 00 84	•
10	Butterfly Valve with regulating flap (Requires operating cable)	90 mm		330 00 175	•
10.1	Operating Cable for Butterfly Valve			22 1000 01 03 00	•
12	Ducting Flange (Plastic connecting piece)	ø 75 mm, black	12a	22 1000 01 00 36	•
	For vents, Items: 11, 12, 13 and 14	ø 90 mm, black	12b	22 1000 01 00 37	•
12.1	Air Control Element	** for fitting, order no. 22 1000 01 00 36 - Plastic, ø 75 mm	12.1a	22 1000 01 00 80	•
	(2 position)	*** for fitting, order no. 22 1000 01 00 37 - Plastic, ø 90 mm	12.1b	22 1000 01 00 81	•

DRAFT #1 – Stand: 02.2025 – NCN Design & Illustration: 02/16/2025

6 PARTS LIST

SPARE PARTS LIST - ECHO 6 DUCT SYSTEM (Table 6.3)

DESCRIPTION & PART #'S

Item No.	Description	Specification	item No. (Fig 6.3)	Part Number	Model # 12 V B/D5
13	90° Upright Vent (Rotatable)	Suitable for ø 75/90 mm fitting, black)		22 1000 01 00 68	•
14	30° Outlet Screen (Flat) (Rotatable)	Suitable for ø 75/90 mm fitting, black)		22 1000 01 00 52	•
14.1	0° Outlet Screen (Flat) (For 75/90mm flange)	Suitable for 75/90 mm fitting, black)		22 1000 01 00 48	•
15	Outlet Screen Closable (Rotatable) see Ducting Flange (Plastic) for fitting	Suitable for ø 75/90 mm fitting, black)		22 1000 01 00 76	•
18.1	Plastic Reducer for "Y" or Ducting Union	di=100 mm (4"), da=75 mm (3"), L=50 mm	18.1a	25 1226 89 00 47	•
		di = 75 mm (3"), da = 60 mm (2.4"), L = 45 mm	18.1b	25 1226 89 00 50	•
18.2	Plastic Reducer	di = 60 mm, da = 75 mm, L = 40.5 mm		25 1688 89 00 10	•
18.3	Hood Adapter	(black plastic) di = 90 / 100 mm or 3.5" / 4"	18.3a	20 1607 80 00 01	•
		d = 100 mm (4")	18.3b	20 2900 50 20 02	•
19	Ducting Union, straight	d = 100 mm (4")		22 1000 01 00 07	•
20	Air Silencer (Inlet & Outlet)	100 mm (4")		25 1226 89 56 00	•
23	Stainless Steel Hose Clamp	59-83 mm (75 mm or 3" Ducting)	23a	5550002	•
		84-108 mm (100 mm or 4" Ducting)	23b	5550003	•

7 TECHNICAL, WARRANTY & QUALITY

WARRANTY

The warranty is important part of customer support during the product's service life. It is also an integral part of Eberspaecher's quality system. Normally, the warranty period for AL3 D6L Heater is 2000 hours/2 years (whichever comes first).

Refer warranty manuals:

- Warranty Manual
- Web link: CA-TO-Warranty@eberspaecher.com

It is mandatory to use warranty related manual for authorized troubleshooting for warranty claim.

NOTE

- In order to ensure the heater fulfills warranty requirements, following must be satisfied:
  – 3 years/2000 hours from unit manufacturing date
  – 2 years/2000 hours from retail invoice date
  – 2 years/2000 hours from in-service date if the heater is installed by an OEM.
- The warranty claim must be administered and performed by Eberspaecher Climate Control Systems authorized dealers only.
- Usage of EDiTH/Easy Scan for heater diagnostics reduces additional processing time for warranty.
- Regardless of the type and nature of the fault, the original ECU must be replaced at the last. Contact Eberspaecher Climate Control Systems or authorized dealers for additional information.

CERTIFICATION

We are committed to ensure quality products for which our processes and systems are modified and controlled as per key objectives set out in quality policy.
To achieve milestones that value to our customers, we involve regularly to carry out improvement or error proofing activities.

We involve both our suppliers and customers during product development and daily operations of the company. Our products are under constant screening of quality assurance in addition to regular audits from internal and external teams.

Eberspaecher has already qualified for the following standards:

Quality management as per
IATF 16949: 2016 and ISO 9001: 2015

Environment management system as per
ISO 14001: 2015

HEALTH AND SAFETY

Eberspaecher Climate Control Systems gives utmost importance to workplace health and safety and abides by highest standards possible:

DISPOSAL

Disposal of materials
Old devices, defective components and packaging material can all be separated and sorted into puregrade factions so that all parts can be disposed of as required in an environment-friendly manner or recycled where applicable.
Electric motors, controllers and sensors (e.g. temperature sensors) are deemed to be "electronic scrap". Follow local standards during disposal and recycling of product or its packaging materials.

Dismantling the heater
The heater is dismantled according to the repair stages in the current troubleshooting / repair instructions.

Packaging
The packaging of the heater can be kept in case it has to be sent back.

Handling
The heater assembly must be handled with care using appropriate tools and equipments. Do not stake and place up side down.

EU DECLARATION OF CONFORMITY

We herewith declare that the version of the heater placed on the market by us conforms to the applicable provisions of the following EC Directives.

EU Directive 2014/30/EU

CE

The full Declaration of Conformity can be viewed and downloaded from the download centre under www.eberspaecher.com.

UKCA Declaration of Conformity

We herewith declare that the version of the heater placed on the UK market by us conforms to the applicable provisions of the following UK Directives.

Electromagnetic Compatibility, Statutory Instrument 2016 No. 1091

UK CA

The full Declaration of Conformity can be viewed and downloaded from the download centre at www.eberspaecher.com.

CONTACT US:

Eberspaecher Climate Control Systems (Eberspaecher NA)

6099A Vipond Dr., Mississauga
Ontario L5T 2B2
Canada
Eberspaecher Technical Support
Phone number: 905-670-0960/800-387-4800
CA-TO-Warranty: CA-TO-Warranty@eberspaecher.com
CA-TO-TechServices: CA-TO-TechServices@eberspaecher.com

NOTES:

Eberspaecher Climate Control Systems
(800) 387-4800
(905) 670-0960
(905) 670-0728 Fax
CA-TO-Warranty CA-TO-Warranty@eberspaecher.com
CA-TO-TechServices CA-TO-TechServices@eberspaecher.com

Eberspächer

Web Edition Version 02/2025 Subject to change without notice. Printed in Canada.