Marine heater installation guide

AIRTRONIC D2, *AIRTRONIC* D4, D5LC

Espar

Espar Products, Inc.
6435 Kestrel Road
Mississauga, Ontario
L5T 1Z8 CANADA
Tel: 905-670-0960
800-668-5676 In CDA
800-387-4800 In U.S.A.
Fax: 905-670-0728

www.espar.com



1 Introduction

Concept of this manual

This manual aims to provide all the necessary information to assist with the installation of Eberspacher Airtronic D2/D4 and D5LC air heaters into marine craft when used in conjunction with the heater's technical description manual.

This manual has been divided into chapters for quick and easy reference as listed below.

Please Note!

Additional safety and statutory information is to be found within the technical description and operating instruction manuals that accompany this manual. If you require information specific to your installation, which is not included in our manuals, please contact Eberspächer.

1 **Introduction**
Provides initial information and advice on using the content of this manual.

2 **Planning the installation**
Information and considerations before starting the installation.

3 **Positioning the heater**
Discusses suitable mounting locations and possibilities.

4 **Air ducting**
The heater rating factors and ducting considerations.

5 **Exhaust and combustion air system**
Advice on routing the exhaust and combustion air, as well as installing the exhaust hull fitting.

6 **Fuel system**
Connections and limitations of the fuel system.

7 **Electrical system**
Information on connecting the heater electrics and positioning of the operating switch.

8 **Commissioning the system**
Information on using your heating system for the first time.

9 **Warranty**
Information on the warranty documentation.

1 Introduction

Special text structure, presentation and picture symbols

This manual uses special text structures and picture symbols to emphasise different contents. Please refer to the examples below for the corresponding meanings and associated actions.

Picture symbols

§ **Regulation!**

This picture symbol with the remark “Regulation” refers to a statutory regulation, failure to comply with this regulation results in expiry of the type of permit for the heater and preclusion of any guarantee and liability claims on J. Eberspächer GmbH & Co, KG.

 **Danger!**

This picture symbol with the remark “Danger!” refers to the risk of a fatal danger to life and limb. Failure to comply with these instructions can result in severe injuries or even death under certain circumstances.

 **Caution!**

This picture symbol with the remark “Caution!” refers to a dangerous situaton for a person and/or the product. Failure to comply with these instructions can result in injurys to people and/or damage to machinery.

Please Note!

These remarks contain application recommendations and useful tips for installation of the heater.

Safety instructions for installation and operation!

 **Caution!**

- The heat exchanger of air heaters is a component subject to high thermal loads which must be replaced 10 years after initial commissioning of the heater.
- Only the control elements approved by Eberspacher must be used to operate the heater. The use of other control elements can cause malfunctions.
- Repairs by unauthorised third-parties or with not original spare parts are dangerous and therefore not allowed.
- The following measures are not allowed:
  – Changes to components relevant to the heater
  – Use of third party components not approved by Eberspächer
  – Nonconformities in installation or operation from the statutory regulations safety instructions or specifications relevant to safe operation as stated in the installation instructions and operating instructions, This applies in particular to the electrical wiring, fuel supply, combustion air system and exhaust system
- Only original accessories and original spare parts must be used during installation or repairs.
- When carrying out electric welding, the battery should be disconnected to protect the controller.
- The heater must not be operated where there is a risk of an accumulation of flammable vapours or dust.
- The battery isolator switch must not be turned off until the heater has completed its cooling cycle.
- The heater must be switched off when refuelling.

1 Introduction

Please read carefully the following instructions, these have been compiled to assist you with every aspect of installing your heater. Special attention is required to the Safety or Caution areas, which are found at the end of each section.

To ensure maximum performance from your heater and for your own safety, please adhere to the following instructions closely, being aware that in the unlikely event of a heater failure during the warranty period, that warranty may be rejected if the heater is not installed in accordance with these instructions.

Additional operational, technical and safety information, specific to the model of heater you are installing, is provided in the heater technical description and operating instructions manuals that are included within the heater packaging. Please ensure you have this for reference before and during your installation.

When installing the heater, for your own safety, please use all necessary personal protection/safety equipment where required.

2 Planning your installation

Before you begin we advise that you take some time to plan the installation.

Where and how you install your system will depend on various limitations of both your boat design and construction as well as the technical specification of the heater. Because of this we have endeavoured to give helpful advice within the different sections of this manual, so we advise that each section is read fully before commencing the installation.

As a general guide before you begin, be aware of the location of the boat's fuel and water tanks, the batteries and any cold box, fridge or cooker that may prohibit the routing of the hot air ducting or affect the installation.

Before installing the heater into the boat, ensure that in doing so you are not infringing upon or contravening any legal requirements of the boats use or construction. For instance, if the boat is to be used for hire purposes, it may require additional systems or warning labels to be installed, which may not be mentioned in this manual. Similarly, advice from the boat manufacturer may be required if you plan to cut through bulkheads that may be structurally important to the boat design.

Regulations that could affect the installation of the heater may be different in each country, so please check.

3 Positioning the heater

The heater should be installed in a dry and protected position and within the permissible mounting planes as shown. Before deciding on the position, be aware that the location of the exhaust hull fitting and length of the exhaust may limit where you position the heater unit. Refer to the exhaust chapter for further information. Also you must consider where the heater will draw in the air for heating and its limitations as shown in the ducting chapter of this manual.

Cockpit locker or engine/machinery spaces are ideal installation locations for the heater.

However, the heater must not be installed into any accommodation area.

Ideally the heater is installed with the exhaust, fuel and combustion air connections pointing vertically downward. Failure to achieve this could affect the optimum performance of the heater particularly when sailing at an angle. The heater will operate in conditions of permanent 15° angle and after starting to a maximum angle of up to 30°.

When deciding on the position, consideration should also be given for future servicing and access for removal of the heater.

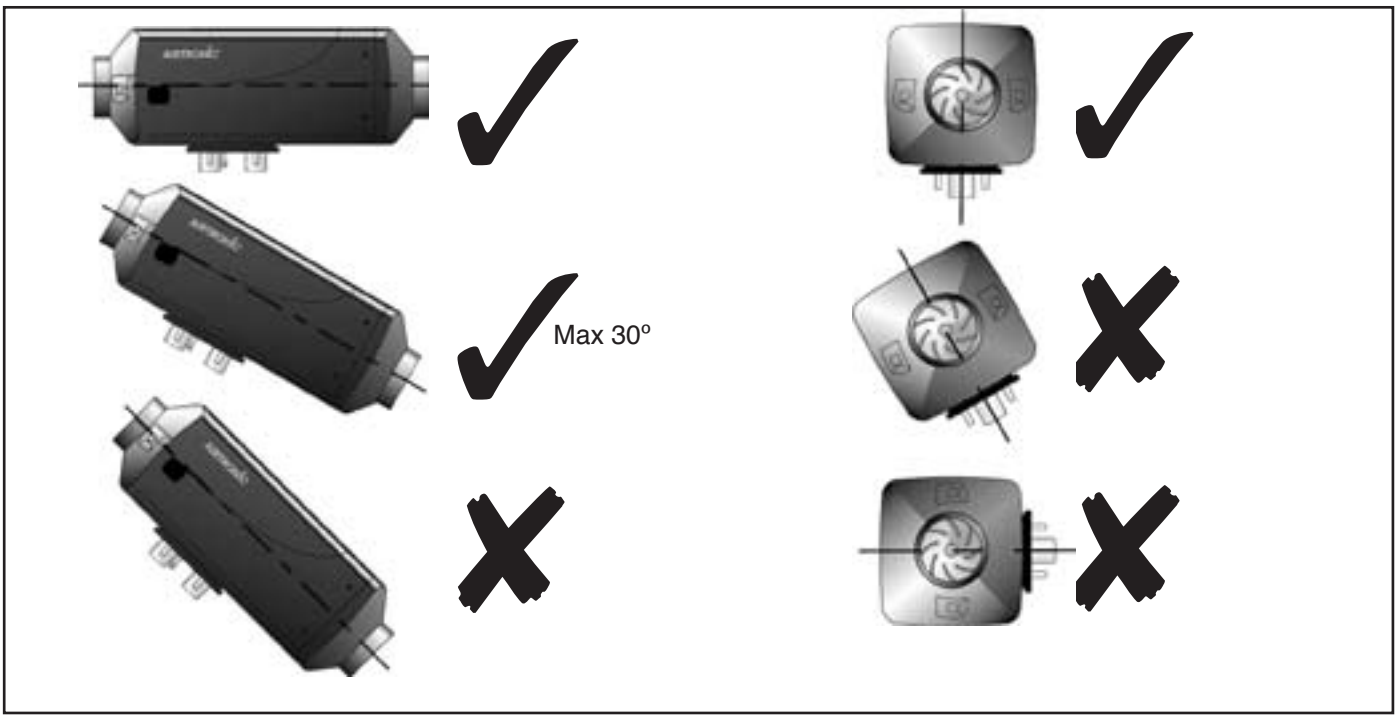

Attach the heater mounting bracket to a suitable strong bulkhead. Thin bulkheads may need additional support to give the heater a secure mounting. Care should be taken to avoid securing directly onto cabin bulkheads where the possibility of noise or vibration could be transmitted.

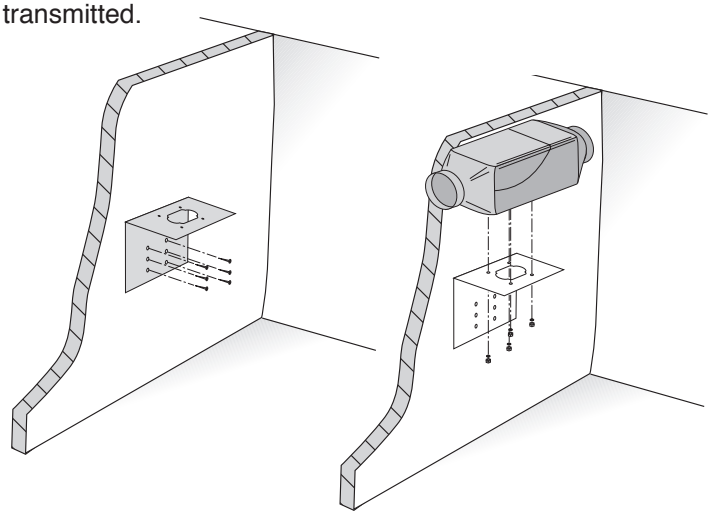

Caution!

Safety Instructions!

- The heater must be located so that aerosol cans, fuel containers or other flammable/ combustible materials cannot be stored on or close to the heater.
- The heater must not be located in a position where it could be damaged or affected by the stowing of any items, or used as a step.

4 Air ducting

When installing the inlet and hot air ducts, the ducting system should contain the minimum amount of bends and be as straight as possible. However, on a boat this is rarely achievable. To assist the design of the duct system and to ensure the heater does not overheat, each heater model has been given a rating factor, which must not be exceeded.

To illustrate this the following is shown

Example: Airtronic D4 90mm ducting 2 outlet (Open / Closeable)

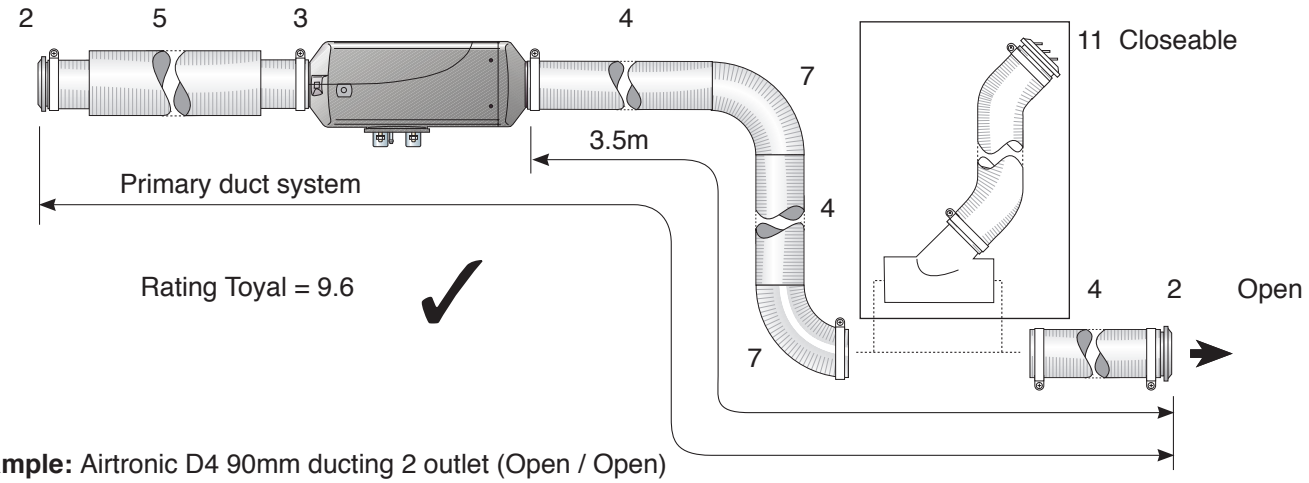

Example: Airtronic D4 90mm ducting 2 outlet (Open / Open)

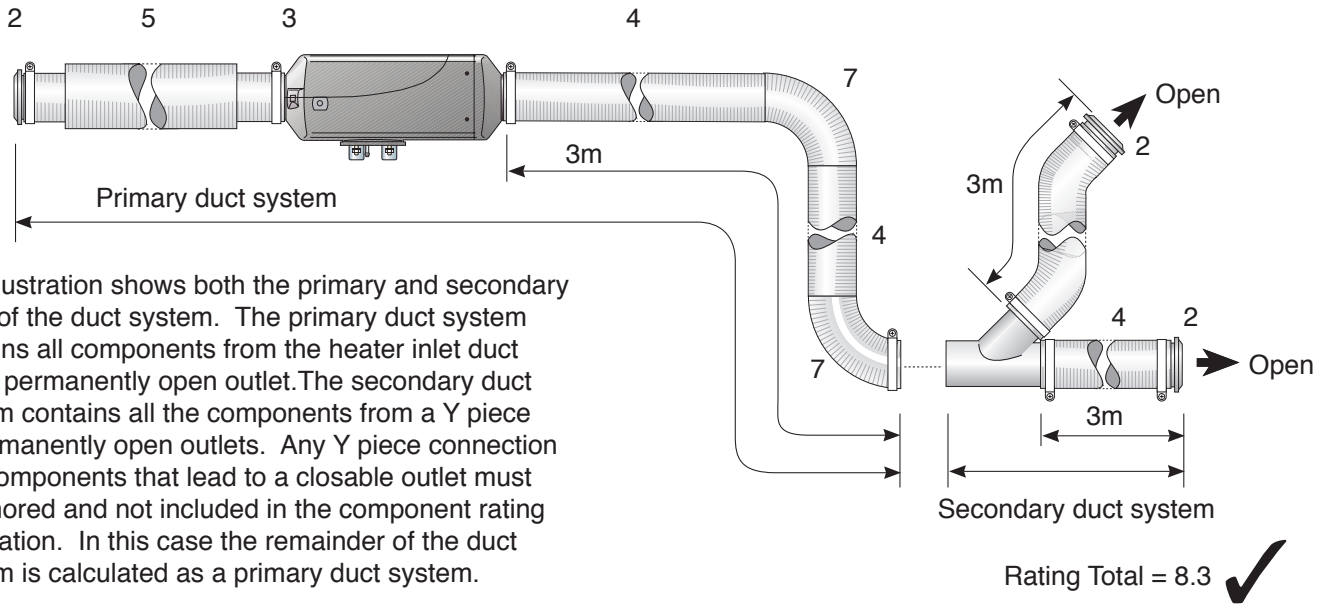

The illustration shows both the primary and secondary parts of the duct system. The primary duct system contains all components from the heater inlet duct to the permanently open outlet.The secondary duct system contains all the components from a Y piece to permanently open outlets. Any Y piece connection and components that lead to a closable outlet must be ignored and not included in the component rating calculation. In this case the remainder of the duct system is calculated as a primary duct system.

Heater Components

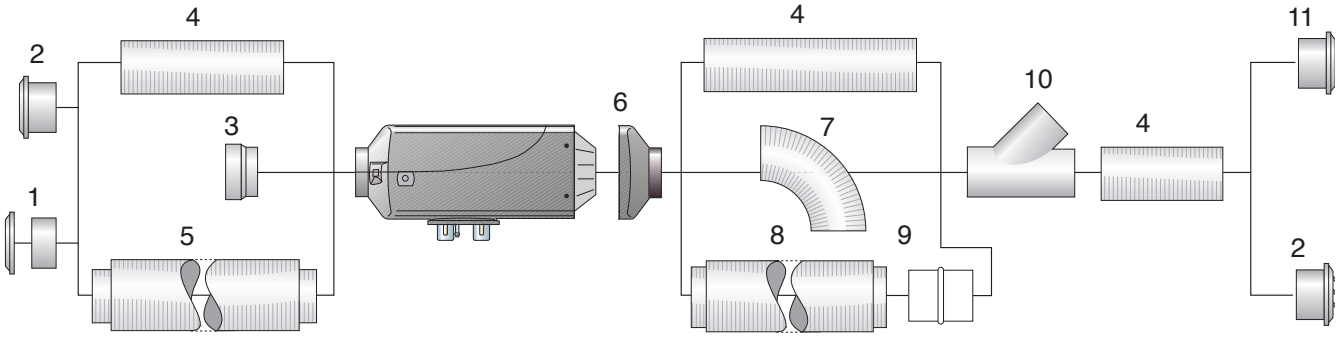

4 Air ducting

The rating factor for each heater model varies depending on the size of the duct that connects directly to the heater reduction hood. In general, a larger duct creates less restriction for the heater and therefore allows a longer duct system to be used. To check if a duct system is permissible, each part of the duct system has been given a component rating which may change depending on its size and the number of permanently open outlets on the system.

Airtronic D2

Maximum heater rating using Ø 60 mm ducting = 6
Maximum heater rating using Ø 75mm ducting = 10

No	Description	Diameter	Primary Duct	Secondary Duct
1	Grill and connector	Ø 60/75mm	1.7	0.6
2	Rotatable outlet	Ø 60/75mm	0.4	0
3	Reduction ring	Ø 60-75mm	-	-
4	Flexible duct, per m	Ø 60/75mm	1.0	0.3
5	Intake silencer	Ø 75mm	0.5	-
6	Reduction hood	Ø 60/75mm	0	0
7	Flexible duct 90˚ bend	Ø 60mm Ø 75mm	1.2 1.2	0.8 0.5
8	Duct Silencer	Ø 75mm	1.0	0
9	Connector	Ø 75mm	0.1	-
10	Y branch	Ø 60mm Ø 75mm	- -	0.3 0.4
11	Closable outlet		-	-

Airtronic D4

Maximum heater rating using Ø 75 mm ducting = 3
Maximum heater rating using Ø 90mm ducting = 10

No	Description		Primary Duct		Secondary Duct	
			Ø 75mm	Ø 90mm	Ø 75mm	Ø 90mm
1	Grill and connector	Ø 75/ 90mm	1.4	1.4	-	0.5
2	Rotatable outlet	Ø 75mm Ø 90mm	0.6 -	0 2.4	0.5 -	0.3 0.3
3	Reduction ring	Ø 75- 90mm	0	0	0	0
4	Flexible duct, per m	Ø 90mm	0	1.0	0	0
5	Intake silencer	Ø 75mm	1.0	0.8	-	-
6	Reduction hood	Ø 75/ 90mm	0	0	0	0
7	Flexible duct 90˚ bend	Ø 90mm	0	1.0	0	0
8	Duct Silencer	Ø 90mm	0	1.0	0	0
9	Connector		-	-	-	-
10	Y branch	Ø 90mm	-	-	0	0.5
11	Closable outlet		-	-	-	-

D5LC

Maximum heater rating using Ø 90 mm ducting = 10
Maximum heater rating using Ø 100 mm ducting = 10

No	Description	Diameter	Primary Duct	Secondary Duct
1	Grill and connector		0.5	0.25
2	Rotatable outlet	Ø 90/100mm	3.25	1.0
3	Reduction ring	Ø 90-100mm	0	0
4	Flexible duct, per m	Ø 90mm Ø100mm	1.0 0.5	0.3 0
5	Intake silencer	Ø 90mm Ø 100mm	0.6 0.25	0.3 0
6	Reduction hood	Ø 90mm	-	-
7	Flexible duct 90˚ bend	Ø 90/100mm	0.25	0
8	Duct Silencer	Ø 90mm Ø 100mm	0.6 0.25	0.3 0
9	Connector		-	-
10	Y branch	Ø 90mm Ø 100mm	- -	0.5 0
11	Closable outlet		-	-



Danger!

Risk of burning and injuries!

- The hot air ducting must be routed and fastened in such a way that there is no risk to people, animals or materials that are sensitive to temperature from radiation/contact or blown hot air.
- If necessary cover or protect exposed ducting or deflect hot air that poses a potential risk.
- High temperatures occur during and after heater operation. Avoid working in the heater vicinity while it is in operation. Switch the heater off and allow it to cool before commencing work. Wear safety gloves if necessary.



Caution!

- The heater air intake must not be positioned in such a way that any exhaust gases can be drawn directly into the heater and its ducting system under normal circumstances.
- The air intake must be positioned so that the hot air cannot directly re-circulate back into the heater.
- In the event of overheating, possible local air temperatures can reach 150°C and surface temperatures up to 90°C. Only use Eberspacher approved temperature resistant ducting.
- To prevent overheating, one outlet must be permanently open and of sufficient cross-sectional area to allow full heater airflow to pass without restriction.

5 Exhaust and combustion air

Exhaust

The exhaust system included in the kit comprises of an exhaust hull fitting, a flexible exhaust with silencer, exhaust bend and drain coil, securing clamps and exhaust support brackets.

Installing the hull fitting

The position of the exhaust hull fitting will depend on several factors. Where you have located the heater, if your boat is sail or power and the suitable surfaces available.

On a sailboat, the preferred location is on the transom, as it is normally the area least likely to be affected by seawater when sailing and it is also close to the heater if it is located in a cockpit locker.

On a motorboat the transom or side of the hull are suitable locations. However, when locating the hull fitting on the transom of a motorboat, the fitting should be positioned a minimum of 300mm above the waterline to avoid any following seas covering the fitting when the boat slows suddenly.

Attaching the exhaust

To avoid water ingress, the exhaust should be installed and routed as illustrated.

Use the exhaust support brackets provided to secure the exhaust and keep it away from heat sensitive materials. Attach the condensate drain coil to the exhaust elbow and using the drain tube supplied route the tube into a suitable bilge area.

Caution!

Safety instructions!

Although the supplied exhaust is insulated, it will get hot during and immediately after heater operation. To avoid potential safety issues the exhaust system must be installed according to these instructions.

- The exhaust hull fitting must not be fitted to a deck or horizontal surface.
- Under no circumstances connect the heater exhaust to an engine exhaust or any other exhaust system.
- The exhaust outlet must vent directly to atmosphere.
- Adequate clearance must be kept around the exhaust system to prevent interference with important functional parts of the boat e.g. steering or throttle cables.
- Route the flexible exhaust giving clearance and consideration to heat sensitive components such as fuel lines, electrical cables etc.
- Ensure the support brackets supplied are used to secure the exhaust and avoid damage by vibration.
- Position the hull fitting so that either the heater combustion air or other inlets cannot draw in exhaust fumes.
- Ensure that the position of the hull fitting allows fumes to exit freely and not affect nearby surfaces e.g. fenders, ropes or mouldings.
- To avoid water ingress the hull fitting must be at least 300mm above the waterline and a suitable bend formed in the exhaust to prevent water collecting in the exhaust.

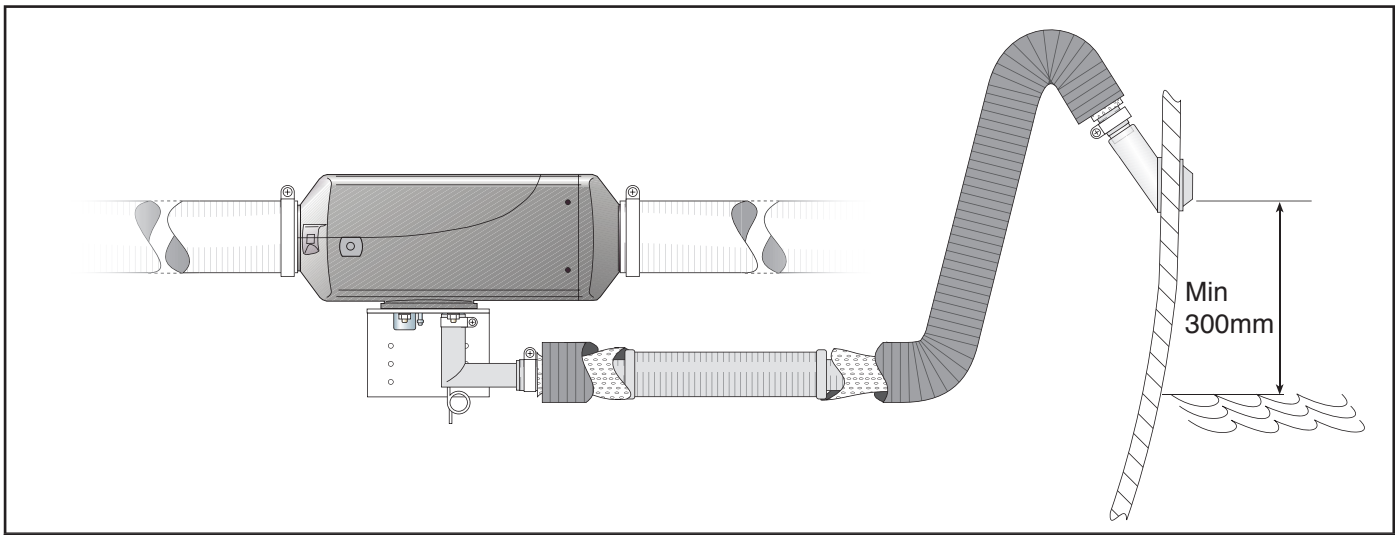

5 Exhaust and combustion air

Danger!

Risk of injury and burns!

All combustion processes produce high temperature and toxic exhaust fumes. This is the reason why the exhaust system must be installed according to these instructions.

- Do not perform any work on the exhaust system while the heater is in operation.
- Before working on the exhaust system, first switch off the heater and wait until all parts have cooled completely, wear suitable gloves if necessary.
- Do not inhale exhaust fumes.
- Do not operate the heater in enclosed spaces such as a boat shed or when the boat may have a cover fitted in winter etc.

Combustion air

The combustion air components supplied consist of a silencer, extension tube and a combustion air hull fitting (optional part).

The combustion air silencer and tube should be installed as shown.

If combustion air is to be taken from an engine/ machinery space, please ensure it is adequately vented and that the area will not be pressurised or under partial vacuum when the engine is in use or ventilation fans are running.

If it is to be taken directly to an external hull fitting ensure that it is positioned with regard to the same conditions as required for the exhaust hull fitting.

Caution!

Safety instructions for the combustion air system.

- The position of the combustion air must not allow exhaust fumes or flammable vapour to be drawn in.
- If a combustion air hull fitting is used ensure water ingress is not possible at any time.
- The combustion air inlet must not be restricted or blocked at any time.
- The combustion air must not be drawn from any of the accommodation areas.
- The combustion air inlet must be drawn from a neutral pressure area.

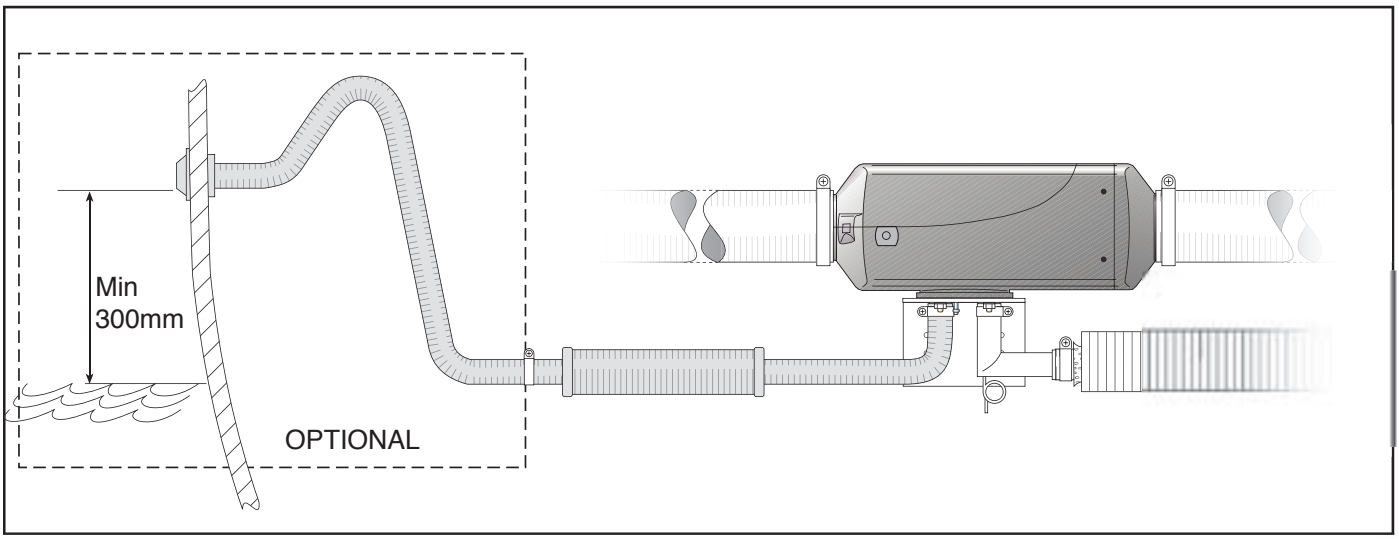

6 The fuel system

The fuel system supplied comprises of a fuel standpipe, a quantity of fuel line, connectors and a fuel-metering pump.

The diagram illustrates a typical installation using a fuel standpipe, which is the preferred method for the fuel take off. This minimises any problems caused by over pressuring, fuel starvation and air leaks that can occur if connected to an engine fuel line.

Fuel can however under certain circumstances be taken from an engine fuel line if it is approved by the engine/ boat manufacturer, but please consult them first. Failure to do so may affect the terms of your warranties.

Installing the standpipe

The fuel standpipe supplied must only be fitted to the top of the fuel tank and on an even surface.
It must not be fitted to the side or bottom of the tank.

Install the standpipe as shown.

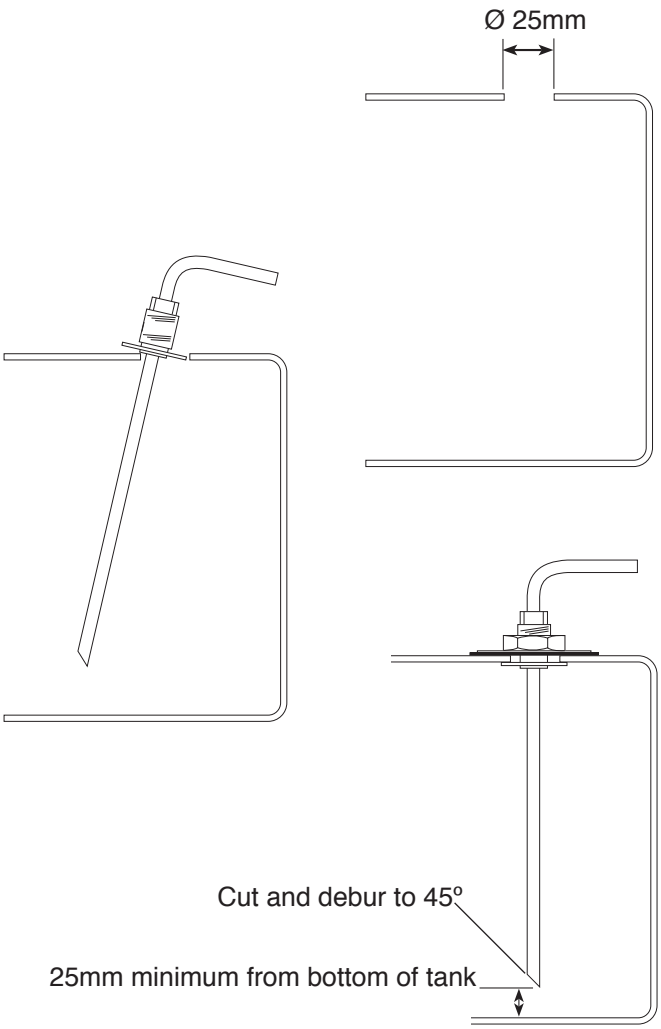

Positioning the fuel-metering pump

When installing the fuel-metering pump, take into consideration that it may be audible when in operation, so it should be installed into an area or onto surfaces that will not transmit the sound into the accommodation. The chosen area should also be free from excessive moisture and the fuel-metering pump must be mounted with the electrical connections/pressure side uppermost within the permissible angles shown.

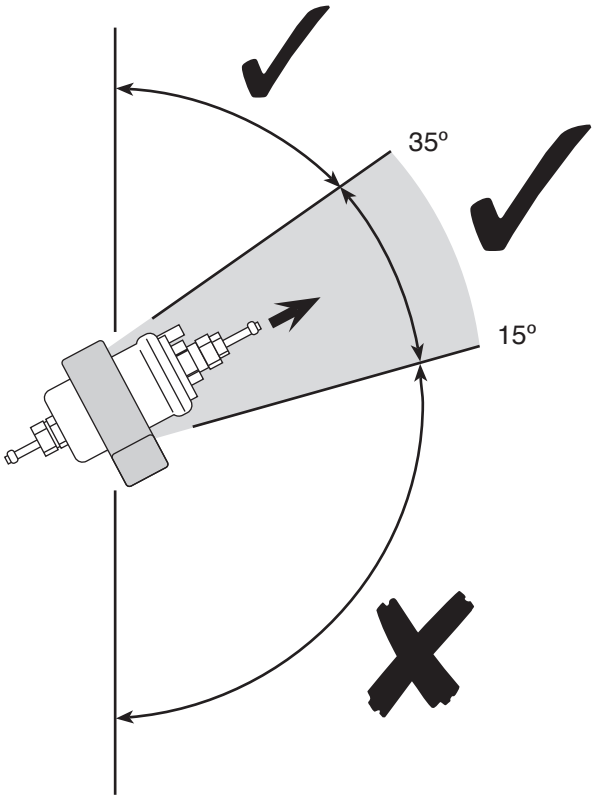

6 The fuel system

Caution!

Safety instructions for installing the fuel pipes.

- Only use a sharp blade to cut the plastic/rubber fuel hoses and pipes. Metal fuel pipes should be cut using an appropriate pipe cutter.
- Ensure all cuts are free from burrs and the fuel lines not crushed or restricted.
- The fuel line from the fuel metering pump to the heater should be run to give a continuous rise.
- Fuel lines must be secured every 50cm to avoid noise and/or damage by vibration.
- Fuel lines must be protected from any mechanical damage.
- Avoid running the fuel lines where their condition and longevity may be affected by movement, vibration or heat.
- Do not secure the fuel lines to any exhaust system.
- Do not position any fuel connection where it could leak onto electrical connections or hot surfaces.
- Approval must be sought from any engine manufacturer or the boat manufacturer before sharing an existing fuel feed.

Danger!

Risk of fire, explosion, poisoning and injuries!

Caution when handling fuel remember to.

- Switch off engine/heater before refuelling or working on the fuel supply.
- No naked flames when handling fuel.
- Do not smoke.
- Do not inhale fumes.
- Avoid contact with skin.

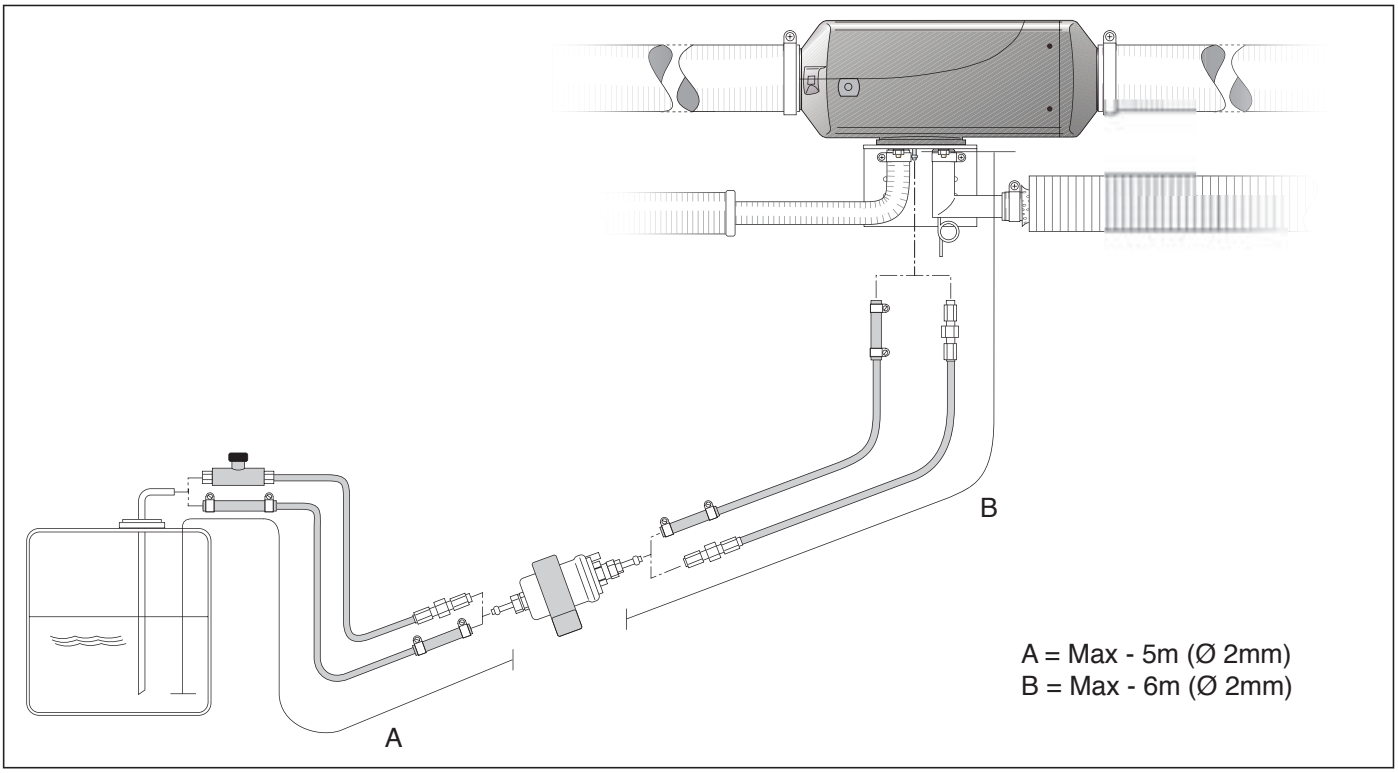

7 Electrical System

The electrical system comprises of a heater cable harness and individual looms for the power supply, operating device and the fuel-metering pump. Also a fuse box assembly and the operating device you have selected are included.

The three individual looms can be routed as one or in separate directions as required depending on the layout of the boat, the location of the batteries and fuel-metering pump, etc.

Positioning and connecting the operating device.

The operating device should be located inside the boat, in an area where it is easily visible and accessible. This is especially important if a timer or where any other device with a programmable display has been specified that may require regular attention.

Operating devices with integral temperature sensors and temperature sensor units should not be located where they can be adversely affected by direct sunlight or drafts. Additionally locating the units near to boat fixtures such as cookers or lighting that can emit heat, should be avoided.

A common position for the operating device is to locate nearby other instrumentation on the boat, in an area such as the chart table/instrument panel. Additional information regarding fastening and operating instructions is supplied with the operating device.

Connecting to the power supply.

The preferred point of connection is the boat's main battery isolator using the fuse assembly supplied. It should be connected so that when the isolator is switched off, the heater cannot be used.

However, if a remote operating device such as a timer or Calltronic is to be used, then the heater will need to be wired to the battery (permanently live) side of the isolator so that when the isolator is switched off the heater can still be operated.



Caution!

Connecting to a permanent supply

- If a permanent supply is required an additional isolator or circuit breaker may be required dependant on the legislation of the country.
- Check with the boat marina and your marine insurance policy to see if the heater can be operated when the boat is unattended.
- Ensure only the specified fuse ratings are used.

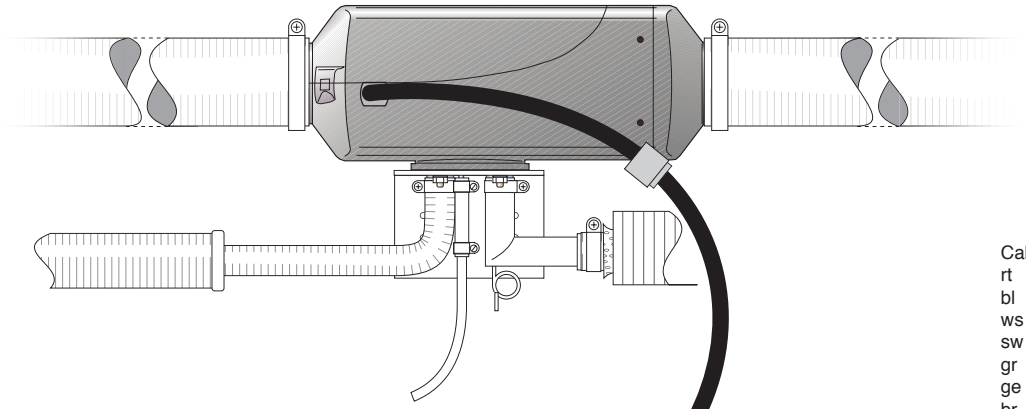

Cable Colours
rt = red
bl = blue
ws = white
sw = black
gr = grey
ge = yellow
br = brown

Sensor



ws
br

D5LC

701 Timer Modulator
with diagnostics and
ventilation (Airtronic only)

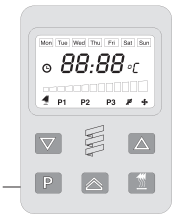

1	rt
2	ge
3	br
4	sw/ws
5	-
6	bl/ws

301 00 200 Airtronic
Modulator / Sensor/
Ventilation

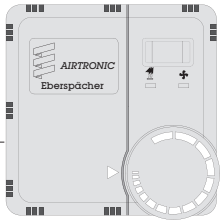

1	gr
2	br/ws
3	rt
4	gr/rt
5	ge
6	-

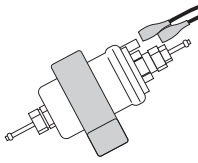

Fuel Pump

301 00 165 Non Airtronic
Modulator / Sensor/
Ventilation

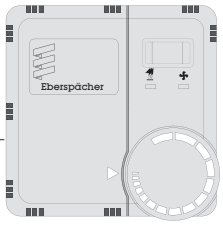

1	br/ws
2	gr/rt
3	bl/ws
4	sw/ws
5	rt
6	ge
T	grey (sensor)

rt
rt
Fuses
rt
br

22 1000 32 07 00
Mini Modulator

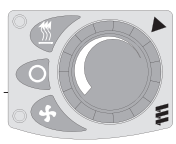

1	rt
2	ge
3	gr
4	br
5	bl/ws
6	br/ws

Fuse Table		
	12v	24v
D2 / D4	5 / 20A	5 / 10A
D5LC	5 / 25A	5 / 25A

25 1895/6 71 00 00
Rheostat Control

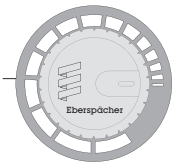

1	br/ws
2	gr/rt
3	bl/ws (D5LC) br (Airtronic)
4	sw/ws (D5LC only)
5	rt
6	ge

8 Commissioning the system

- Check that the batteries are fully charged.
- Check that there is sufficient fuel in the fuel tank.
- Check that the power supply for correct polarity.
- Ensure the operating device is set to its highest setting.
- Now switch on your heater.

Please Note!

Combustion may not be established when the heater is first operated. Several attempts may be required to start the heater. This is due to air being present in the heater fuel lines that needs to be purged by the fuel-metering pump.

9 Warranty information

Separate documents concerning warranty accompany this manual.


Espar